Mantle Clock • Firewood Carrier • Coat Rack • Spice Rack • Lap Dovetail Joinery

Woodsmith®

Vol. 20 / No. 119

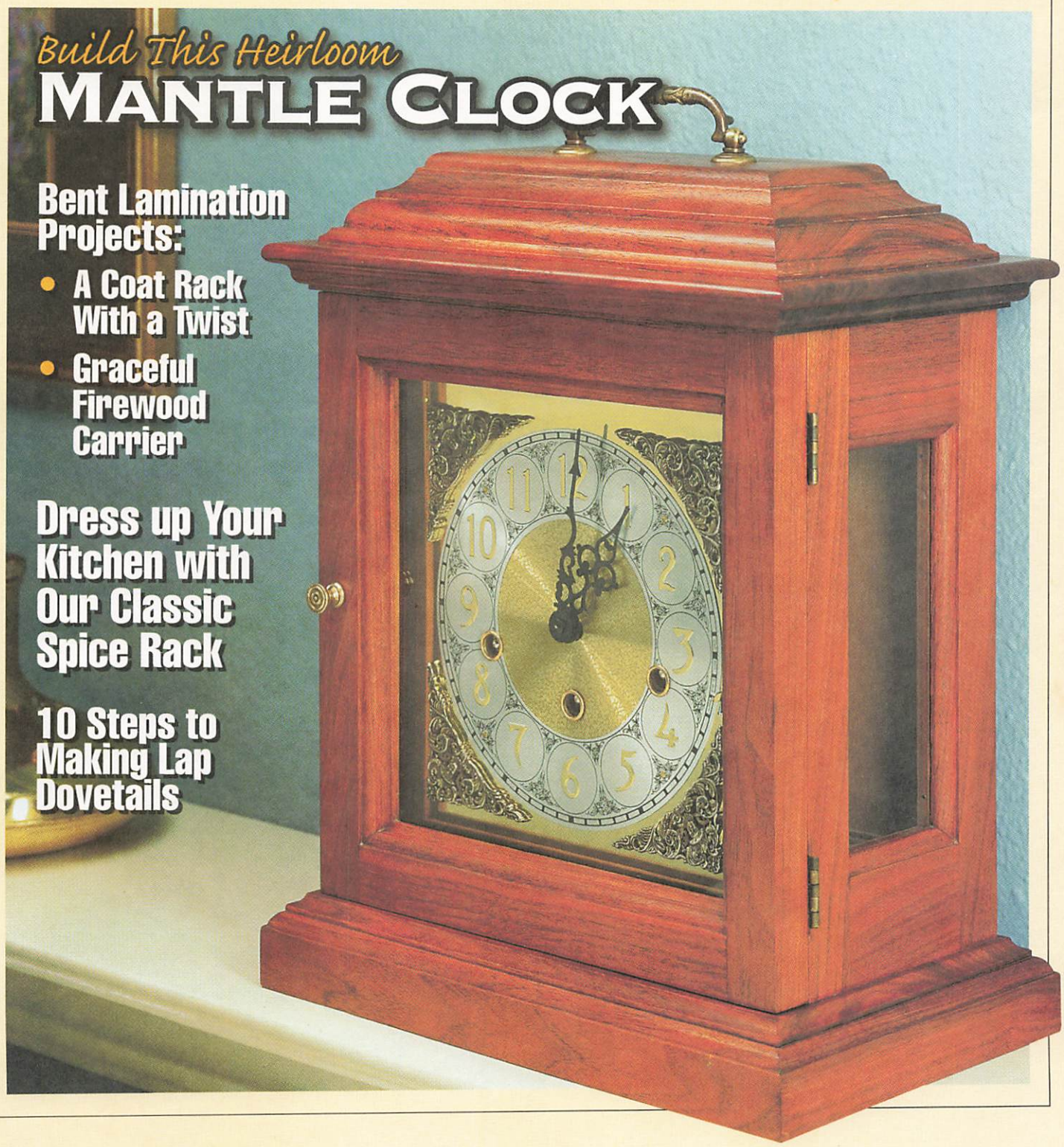

Build This Heirloom

MANTLE CLOCK

Bent Lamination Projects:

- A Coat Rack With a Twist
- Graceful Firewood Carrier

Dress up Your Kitchen with Our Classic Spice Rack

10 Steps to Making Lap Dovetails

Woodsmith

No. 119 October, 1998

Publisher Donald B. Peschke
Editor Terry J. Strohman
Associate Editors Jon Garbison, Vincent Ancona
Art Director Todd Lambirth
Senior Illustrators David Kreyling, Dirk Ver Steeg, Mike Mittermeier

CREATIVE RESOURCES
Creative Director: Ted Kralicek • *Project Developer:* Ken Munkel • *Sr. Project Designers:* Kent Welsh, Kevin C. Boyle • *Shop Manager:* Steve Curtis • *Shop Craftsman:* Steve Johnson • *Senior Photographer:* Crayola England

BOOKS
Executive Editor: Douglas L. Hicks • *Art Director:* Steve Lueder • *Senior Graphic Designer:* Chris Glowacki • *Graphic Intern:* Vu Nguyen • *Editorial Intern:* Joseph E. Irwin

CIRCULATION
Subscriber Services Director: Sandy Baum • *New Business Director:* Glenda K. Battles • *New Business Manager:* Todd Bierle • *Promotion Manager:* Rick Junkins • *Renewal Manager:* Paige Rogers • *Billing Mgr.:* Rebecca Cunningham • *Assistant Subscription Mgr.:* Joy Krause • *Associate Graphic Design Director:* Susie Rider • *Sr. Graphic Designer:* Cheryl L. Simpson

CORPORATE SERVICES
Vice President of Planning and Finance: Jon Macarthy • *Controller:* Robin Hutchinson • *Sr. Account.:* Laura Thomas • *Accts. Payable:* Mary J. Schultz • *Accts. Receivable:* Margo Petrus • *Production Dir.:* George Chmielarz • *Production Assistant:* Susan Rueve • *Electronic Pub:* Douglas M. Lidster • *Pre-press Image Specs.:* Troy A. Clark, Minniette Bieghler • *New Media Manager:* Gordon C. Gaippe • *Web Site Art Director:* Gene Pedersen • *Network Administator:* Chris Harrison • *H.R. Assistant:* Kirsten Koele • *Admin. Assistant:* Julia Fish • *Receptionists:* Jeanne Johnson, Sheryl Ribbey • *Special Projects Director:* Saville H. Inman • *Building Maint.:* Ken Griffith

WOODSMITH MAIL ORDER
Operations Director: Bob Baker • *Materials Mgr:* Mark Mattiussi • *Customer Service Mgr.:* Jennie Enos • *Warehouse Supr.:* Nancy Johnson • *Buyer:* Linda Jones • *Technical Service Rep.:* Matt TeRonde • *Cust. Serv. Reps.:* Anna Cox, Tammy Truckenbrod, Nancy Downey, Adam Best, Deborah Rich • *Warehouse:* Sylvia Carey • *Quality Control Tech.:* Frank Johnson

WOODSMITH STORE
Manager: Dave Larson • *Assistant Manager:* Paul Schneider • *Sales Staff:* Pat Lowry, Jerome Herr, Wendell Stone, Jim Barnett, Kathy Smith, John Johnson • *Office Manager:* Vicki Edwards

Woodsmith® (ISSN 0164-4114) is published bimonthly (Feb., Apr., June, Aug., Oct., Dec.) by August Home Publishing Company, 2200 Grand, Des Moines, IA 50312.

Woodsmith® is a registered trademark of August Home Publishing.
Copyright© 1998 August Home Publishing Company. All rights reserved.

Subscriptions: Single copy: $4.99. One year subscription (6 issues), $21.94. (Canada/Foreign add $6 per year, U.S. funds.)
Periodicals Postage Paid at Des Moines, IA and at additional offices. USPS/Heartland Press Automatable Poly.
Postmaster: Send change of address to *Woodsmith*, Box 37112, Boone, IA 50037-2112.
Subscription Questions? Write to *Woodsmith*, P.O. Box 842, Des Moines IA 50304-9961 or call 1-800-333-5075, 8:00 am to 5:00 pm, Central Time, weekdays. Or fill out the Subscription Services form on our web site: http://www.woodsmith.com
E-Mail: woodsmith@woodsmith.com
World Wide Web: http://www.woodsmith.com

Printed in U.S.A.

EDITOR'S COLUMN

SAWDUST

A few weeks back, I received a phone call asking me to judge a woodcarving competition. I explained that I wasn't an accomplished woodcarver. (I've taken a stab at chip carving a few times and done a little relief carving.) But they said it was okay because they wanted someone with a "different perspective." And since the other judges would be more experienced carvers, I cautiously agreed.

When I arrived on the day of the judging, I was amazed at the number and variety of projects that had been entered. They ranged in size from large carousel horses to tiny pieces of jewelry. And the workmanship and attention to detail was certainly inspiring.

But the thing that impressed me the most was the attitude of the contestants. They didn't seem all that interested in who won or lost. But they were truly interested in what they needed to do to improve their carving.

Everyone I talked to wanted the next carving to be just a bit better than the one before. Perhaps this meant experimenting with a new tool or technique. Or trying a different approach to work out a detail that they hadn't perfected.

Either way the goal was simple — to "stretch" their skills. Maybe that's why I enjoyed myself so much. After all, it's the challenge of continually improving my skills that's one of the things I like best about woodworking.

I guess that's part of the appeal of the projects in this issue. Each one provides a great opportunity to expand your woodworking skills.

MANTLE CLOCK. Take the Mantle Clock on page 6 for example. Here, the challenge is to create three molded mortise and tenon frames. (Two for the sides and one for the door.) But because the pieces are relatively small, errors tend to be very obvious, so it becomes even more important to make accurate cuts and fit the joints carefully. Once you've mastered this technique on the clock, you can apply it to larger projects as well.

SPICE RACK. Another project that gives you an opportunity to stretch your woodworking skills is the Spice Rack featured on page 28. At first glance, there doesn't really seem to be much to this project. After all, it's just twelve pieces of thin stock and a few Shaker pegs. But what makes this project interesting is the lap dovetail joinery. And don't worry if you've never cut a lap dovetail joint before — we've included an article on page 32 that takes you through the process step by step.

BENT LAMINATION. Finally, if you'd like to try something completely different, check out the Firewood Carrier (page 14) and Coat Rack (page 22). Both projects incorporate pieces of wood that are "bent" by laminating thin strips together. Bent lamination isn't nearly as complicated as it might seem at first. In fact, I think you'll find it's true of most "new" techniques. Once you decide to give it a try, it's really pretty simple.

Terry

A LOOK INSIDE

CONTENTS

Features

Mantle Clock 6

Despite its complex profile, the top of this clock was made with built-up moldings and a handful of ordinary router bits. (You probably have most of them in your shop already.)

Firewood Carrier 14

This firewood carrier is extremely strong and durable but also lightweight. The secret is in the bent lamination construction, which takes advantage of the natural strength of the wood.

Bent Lamination 18

You don't have to be Superman to bend wood. All you need is a shop-made bending form, some clamps and a bottle of glue. The secret is to start with thin, flexible strips of wood.

Coat Rack 22

Looking for a place to hang your hat? Try this nifty coat rack on for size. It features simple, curved "hooks," which are a great opportunity to try your hand at bent lamination.

Spice Rack 28

Although it doesn't take much time or wood, this spice rack involves a variety of techniques — from resawing to cutting lap dovetails. And you'll never have to hunt for spice jars again.

Lap Dovetails 32

Lap dovetails are a little bit different than your ordinary dovetail joint. They're a good choice for joining a rail with a frame or leg, and they look great as well.

Resawing Lumber 34

Need some thin stock for your next project? You don't need to own a thickness planer to get it. We'll show you how to use your table saw to safely resaw lumber into thin stock.

Departments

Tips & Techniques 4

Shop Notes 26

Sources 35

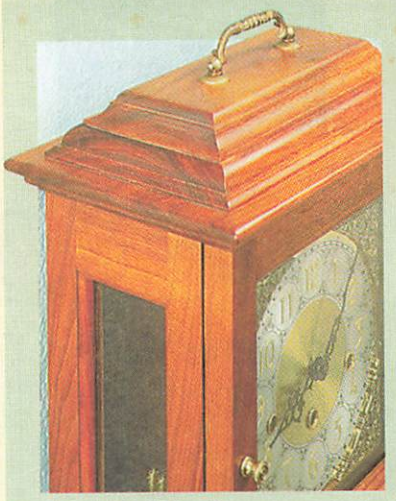

Mantle Clock page 6

Firewood Carrier page 14

Bent Lamination page 18

Spice Rack page 28

TIPS & TECHNIQUES

Chamfer Tip

I'm always worried about tearout when routing chamfers on a workpiece, especially on the end grain. To avoid this problem, I sand the chamfers instead, using a sanding disk mounted in my table saw.

I simply tilt the sanding disc to a 45° angle. Then to provide a bearing surface for the workpiece, I clamp a block of wood to my rip fence, just above the height of the disk, see drawing and detail 'a.'

To sand a chamfer, simply feed the workpiece into the rotating sanding disc and push it forward. You can vary the size of the chamfer by moving the fence in or out.

Henry Fischer
Hastings-on-Hudson, New York

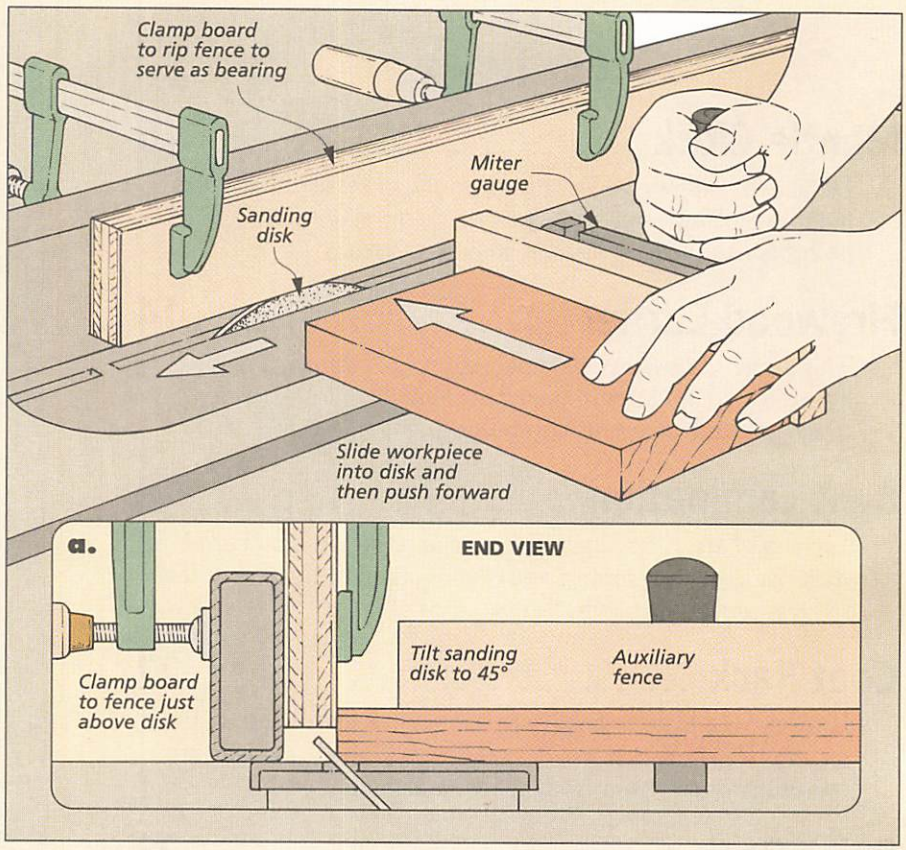

Attaching Glass Stops

When attaching wood glass stops to a frame or door, I like to pre-drill holes for the brads or screws to prevent splitting the glass stop. The problem is that with the pane of glass in place, there's not enough clearance for my drill.

To get around this problem, I keep a narrow strip of glass handy. The strip allows me to position the glass stop but still have enough room to maneuver my drill into place.

Beth Bostic
Des Moines, Iowa

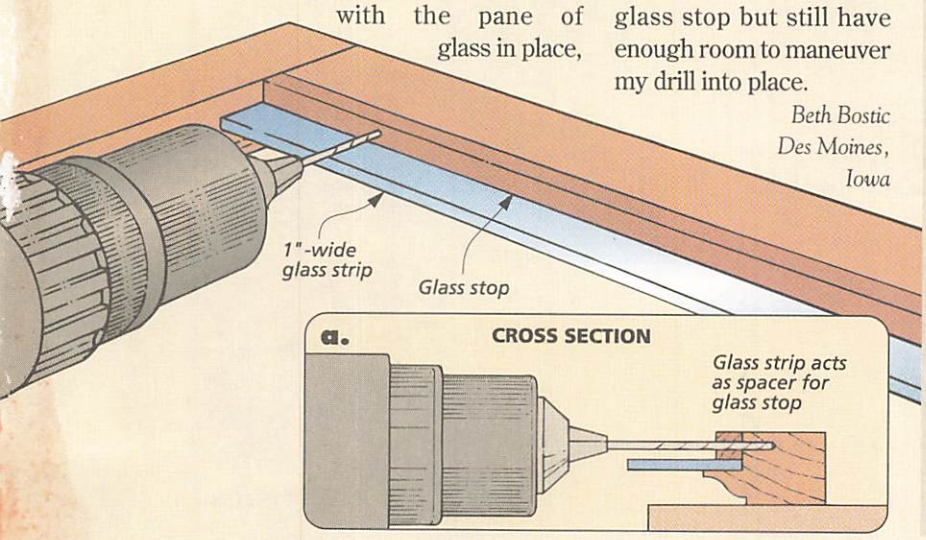

QUICK TIPS

Put a Cork in It

The top of my workbench has a row of round holes for bench dogs. In order to prevent small parts from falling through the holes, I plug them with corks from empty wine bottles.

The corks provide a solid, flat surface. And when I need to use a hole, I simply push the cork through with the bench dog.

Don Kennerly
West Perth, Australia

New Life for Broken Blades

For cutting tight curves, I like to use an 1/8"-wide blade in my band saw. But because these blades are so narrow, they have a tendency to break fairly easily.

Instead of simply tossing out the broken blades, I cut them up and re-use them in my scroll saw. The aggressive cutting action of these blades makes them great for roughing out work.

Robert Rottmann
Palos Heights, Illinois

Knock-Down Clamping Table

Trying to glue up large panels or frames on a small workbench can be difficult. Usually I end up working in the middle of the garage floor. So instead, I came up with this idea for a knock-down clamping table.

The "table" is really nothing more than a couple of 2x4 rails that are supported by a pair of sawhorses, see drawing. A ½"-deep notch is cut in both ends of each rail to allow them to fit over the sawhorses. And a series of V-notches along the top of each rail holds the pipe clamps, see detail 'a.'

I spaced the notches for the clamps about 12" apart. And to avoid a "knuckle buster" situation, I made sure the notches for the sawhorse weren't positioned directly under one of the clamp notches.

To use the table, simply place the rails over the sawhorses and then set the clamps into the V-notches. The rails can be placed closer or further apart to accommodate different lengths of pipe clamps. And when you're all done, the rails simply lift off and can be stored in a corner.

Craig Hetue
Northbrook, Illinois

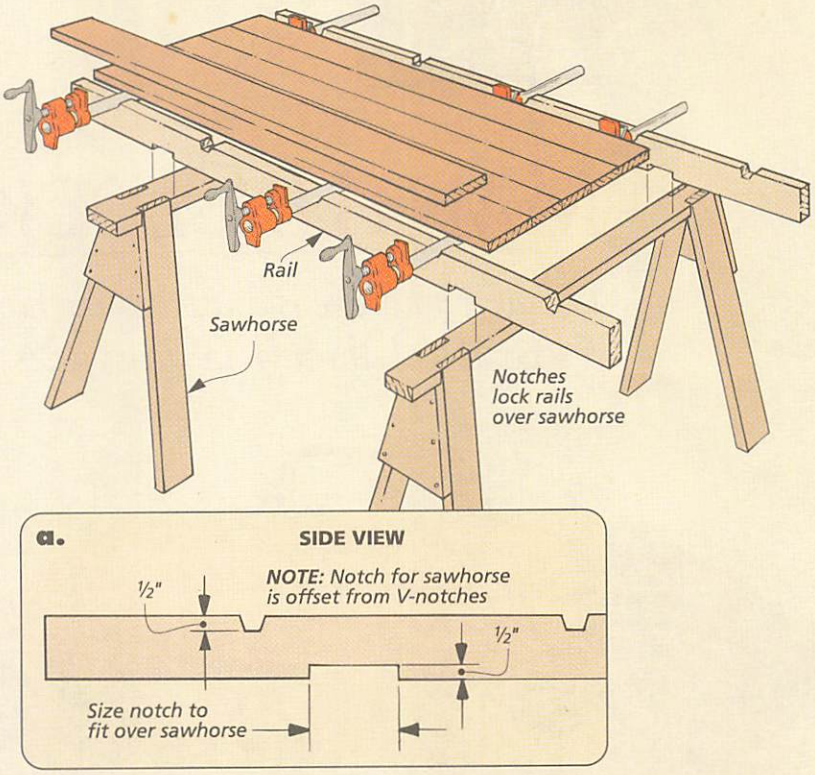

Table Saw Switch Extension

I never cared for the location of the switch on my contractor's saw. Tucked underneath the tabletop on the front of the saw, the switch was difficult to locate without taking my eyes away from my work (a dangerous situation).

To make the switch easier to find, I extended it out from the saw. All it takes is a couple of pipe floor flanges and an iron pipe nipple, see drawing at right.

Simply remove the switch and mount one of the floor flanges to the saw. Thread one end of the nipple into the flange. Then add the second flange to the other end of the nipple.

The power cord can be fished through the center of the flanges and the nipple and wired to the switch, see detail 'a' below.

Shop Note: Depending on the type of switch your saw has, you may need to house the switch in an electrical box.

Paul Kincaid
Lawrence, Kansas

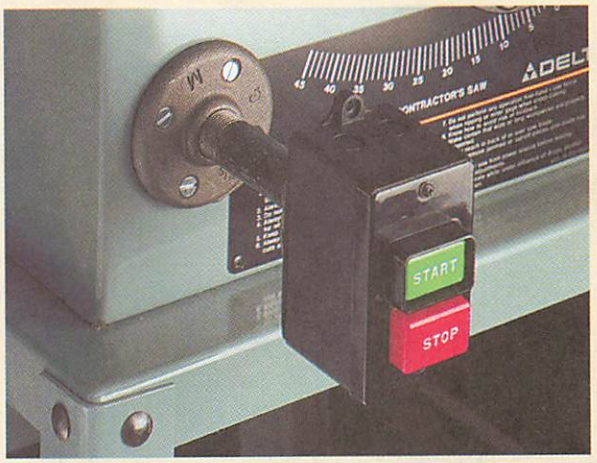

◄ *Common iron pipe fittings can be used to extend a table saw switch.*

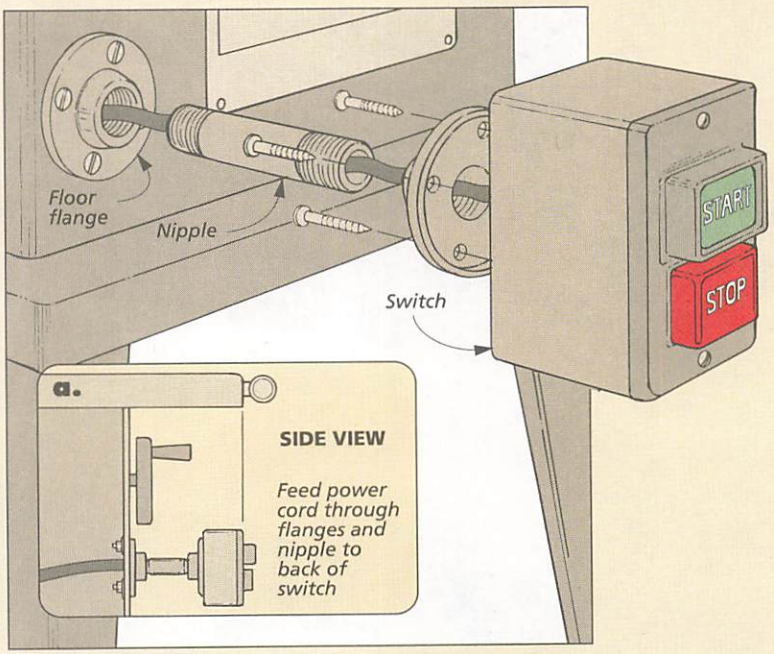

SUBMIT YOUR TIPS

If you would like to share an *original* shop-tested tip, send it to: *Woodsmith,* Tips and Techniques, 2200 Grand Avenue, Des Moines, Iowa 50312. Or if it's easier, FAX it to us at: 515-282-6741. Or use our E-Mail address: woodsmith@woodsmith.com.

Include a brief explanation and sketch or photo. If your tip is published, you'll receive $30 to $150, depending on the published length. And don't worry, we'll rewrite the tip and redraw the art, if necessary. Also, *please* include a daytime phone number so we can contact you if we have any questions regarding your tip.

MANTLE CLOCK

Initially, your eye is drawn to the handsome, molded top of this clock. But a second look through the glass sides reveal an intricate clock movement.

Ever since I was a kid, clocks have always held a certain fascination for me. I think it has something to do with watching all those gears and levers move in harmony, ticking off the seconds and striking away the hours. The problem is that with most clocks, the mechanism is hidden inside a case. To me, that's like looking at an automobile without being able to open the hood.

That's probably why I like this clock. The sides are glass so you can see right in to the brass clock movement inside. And a glass door at the front of the clock protects the dial but still swings open to allow you to wind the clock and adjust the hands.

But aside from the glass panels, there were other details about this clock that got me excited about building one. Take the top of the clock, for example. It looks like a thick, solid piece of wood with a complicated profile molded on the edges. But in reality, it's made up of three separate pieces. And the profile is created with nothing more than a router table and some commonly available router bits.

QUARTZ MOVEMENT. Of course, not everyone shares my fascination for clocks. So we also designed this mantle clock to accept a battery-powered, quartz movement. Aside from being less expensive, you don't have to worry about winding this clock. And since there isn't much to look at with a quartz movement, we substituted walnut plywood panels for the glass in the sides. (See the box on page 13.)

HARDWARE. One more thing. We had a somewhat difficult time locating the exact hardware, movement and clock dial that we were looking for. Although we eventually found everything we wanted, we had to go to a couple of different sources. To make things easier, we've put together a very limited number of kits which include a mechanical movement, dial and all the hardware. For more on this, as well as information on kits with quartz movements, see sources on page 35.

Construction Details

OVERALL DIMENSIONS:
14"H x 11½"W x 7⅛"D

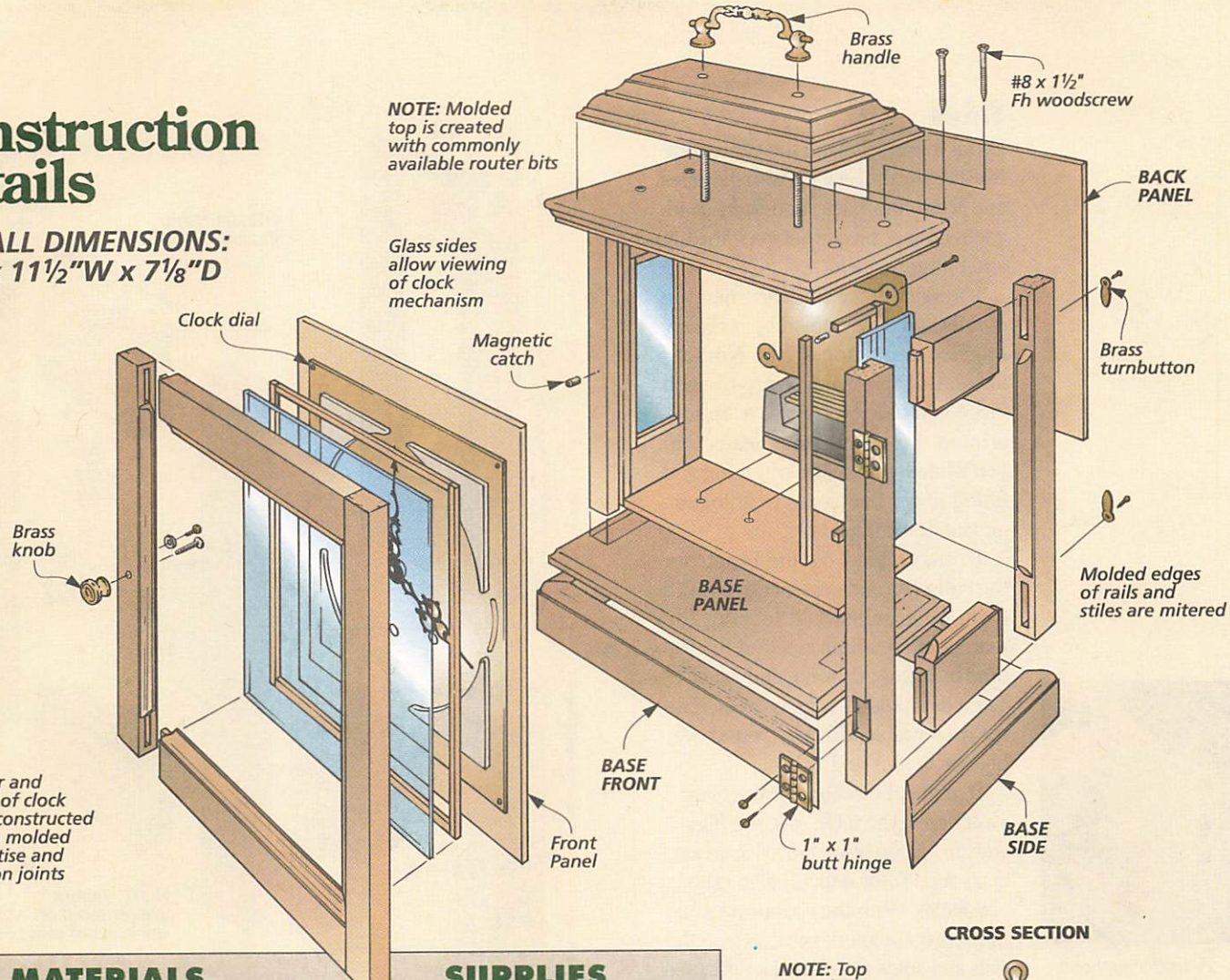

MATERIALS

A	Side Rails (4)	¾ x 2 - 3¼
B	Frt./Bk. Stiles (4)	¾ x 1¼ - 9⅞
C	Frt./Bk. Panels (2)	¼ ply.- 8⅞ x 9⅞
D	Top Panel (1)	¾ x 6⅞ - 11¼
E	Base Frt./Bk. (2)	¾ x 1½ - 11½
F	Base Sides (2)	¾ x 1½ - 7⅛
G	Base Panel (1)	¾ x 6⅜ - 10¾
H	Filler Panels (2)	¼ ply. - cut to fit
I	Lower Cap (1)	¾ x 5¾ - 10⅛
J	Upper Cap (1)	¾ x 4 - 8⅜
K	Door Rails (2)	¾ x 1¼ - 9
L	Door Stiles (2)	¾ x 1¼ - 9⅞
M	Glass Stop	9/32 x 5/32 - 56 in.
N	Support Block (1)	½ x 3 - 3

SUPPLIES

- (1) 4¼" Antique Brass Handle
- (1) ½"-dia. Antique Brass Knob
- (1 pr.) 1" x 1" Antique Brass Hinges
- (1) Mini Brass Knob
- (1) 5/16" dia. Magnetic Catch
- (4) ⅝" Brass Turnbuttons
- (8) #8 x 1½" Fh Woodscrews
- (4) #8 x 1¼" Fh Woodscrews
- (4) #4 x ⅝" Rh Brass Woodscrews
- (4) #2 x ¼" Rh Brass Woodscrews
- (1) Triple-Chime Movement and Dial
- (32) #18 x ⅝" Wire Brads
- (2) ⅛" Glass Panels (3/32" x 2⅝" - 6¼")
- (1) ⅛" Glass Panel (3/32" x 7⅞" - 7⅞")

CUTTING DIAGRAM

¾" x 7" - 48" Walnut (2.33 Bd. Ft.)

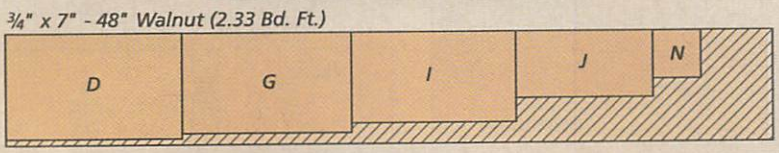

¾" x 7" - 48" Walnut (2.33 Bd. Ft.)

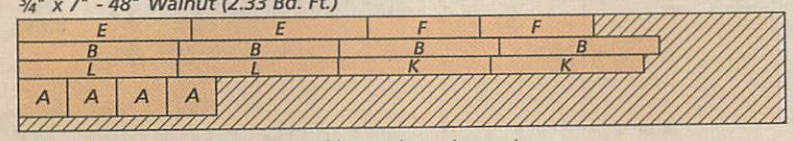

Also Needed: 24" x 24" sheet of ¼" walnut plywood

CROSS SECTION

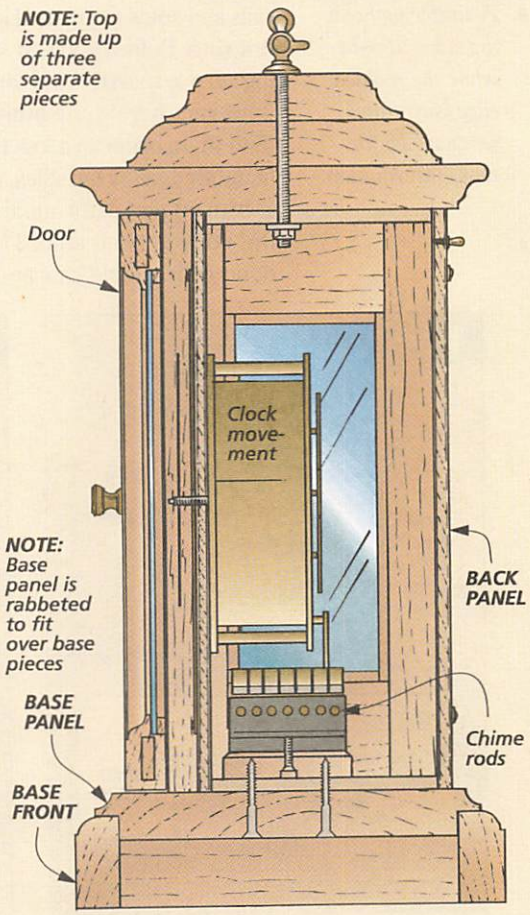

Sides

I built this clock from the center out. In other words, I started with the sides and front and back, and then sandwiched these pieces between the top and bottom panels.

The sides of the clock are made up of rails and stiles joined by ordinary mortise and tenon joints. Nothing fancy. But the inside edge of each piece is molded to create a "frame" around the glass. This means that you'll have to do a little trimming and fitting to get the pieces to fit together. But that comes later.

To start with, I cut the blanks for the **rails (A)** and **stiles (B)** to width from ¾"-thick stock, leaving the blanks longer than needed for the time being, see drawing and detail 'a.' Then the molded edge is created on the router table with a ¼" round-over bit, see Figs. 1 and 1a.

To make the rabbet for the glass, I switched to the table saw, see Figs. 2 and 2a. A dado blade buried in an auxiliary fence cuts a nice, clean rabbet.

MORTISES. With the roundovers and rabbets completed, you can trim the rails and stiles to finished length, see drawing. Before you can start working on the mortise and tenon joints, however, there's one other detail to tend to. In order to allow the rails to fit tightly against the stiles, you'll have to trim off part of the molded edge at the ends of each stile. This can be done with a table saw and a simple jig that holds the workpiece upright, see photo in margin. (For more on this, see page 26.) Then I drilled out the waste for each mortise and squared up the ends and sides with a chisel, see Figs. 3 and 3a.

TENONS. With the mortises made, you can cut the tenons on the ends of the rails to fit, see Figs. 4 and 4a. On these pieces, you don't have to worry about trimming back the molded edge since it's removed when you cut the tenon, see Figs. 5 and 5a.

There is some trimming to be done before the mortise and tenon joints can actually be fitted together,

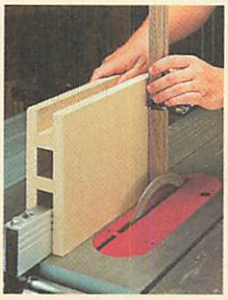

▲ *A simple jig holds the stiles upright while the molded edge is trimmed, see page 26 for more information.*

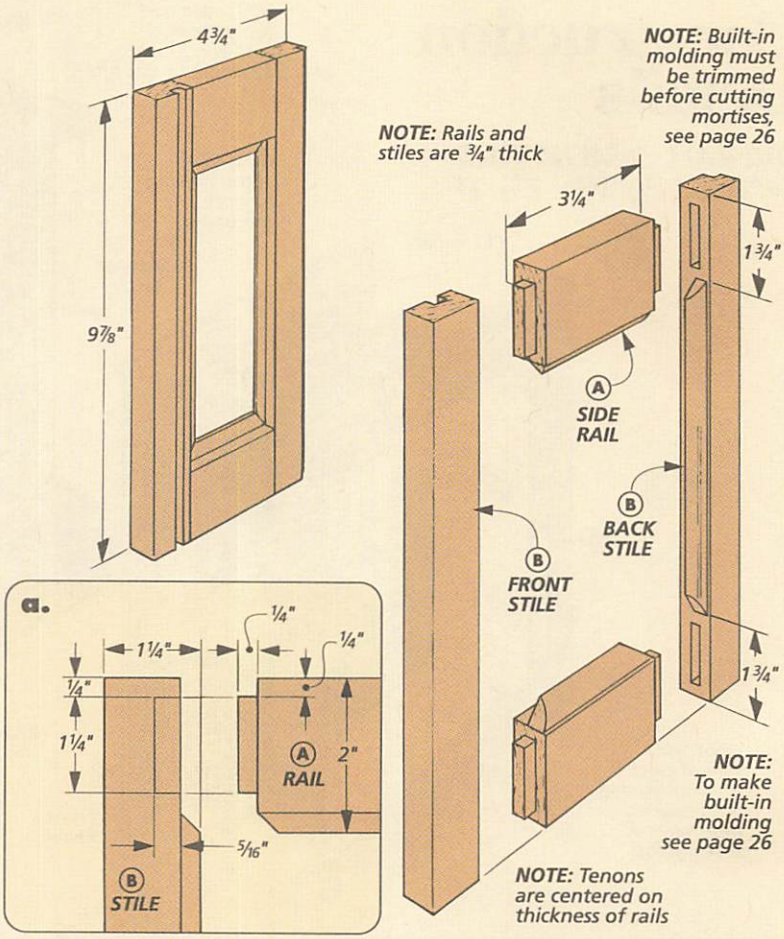

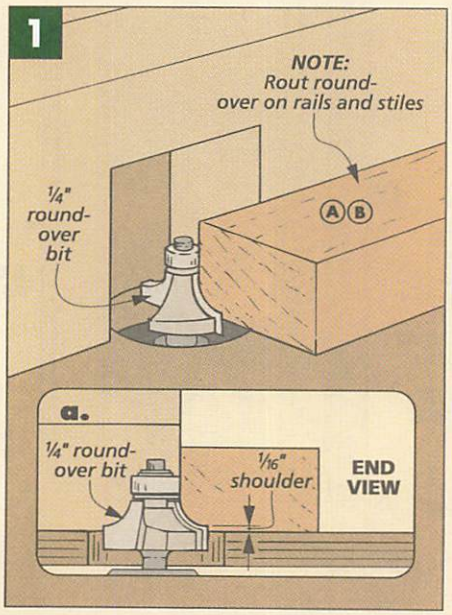

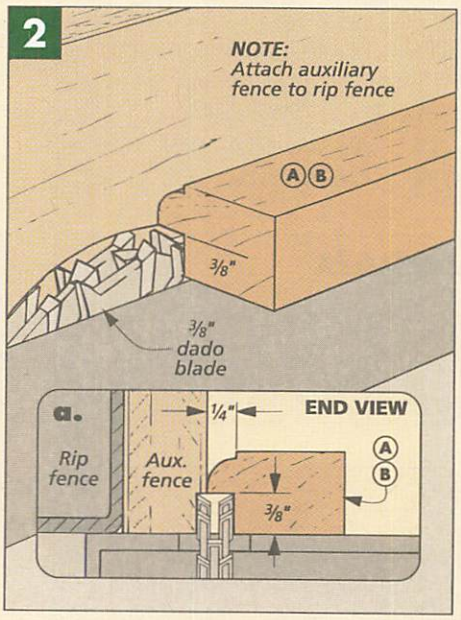

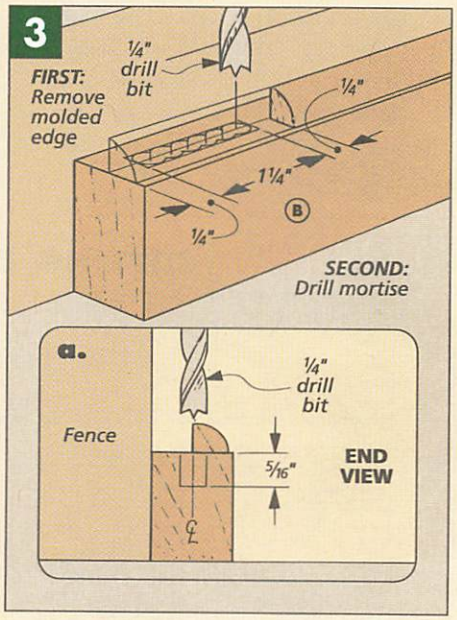

however. The ends of the molded edges must be mitered at 45° to allow the rails and stiles to fit together. To miter these edges, I made a simple jig, see photo in margin. (For more on this jig, see page 26.)

The time you spend fitting the mortise and tenon joints will pay off in the next step — gluing the side pieces up to create two "frames." Once this is done, you can start making the grooves for the front and back panels that will connect the two sides.

A groove near the front edge of each frame holds a ¼"-thick plywood panel, see Fig. 6a. And a rabbet cut along the back edge of each frame will hold a plywood back, see Fig. 6.

HINGE MORTISES. Although the door will be one of the last parts added to the clock, it's a lot easier to cut the mortises for the door hinges at this stage, before the sides are sandwiched between the top and bottom. To do this, I simply clamped one of the sides in a woodworking vise and used one of the hinges as a template for laying out the mortises. Then I carefully chiseled out each mortise.

FRONT & BACK PANELS

The side frames are connected by two plywood **panels (C)**, see drawing. Both panels are identical in size, but the front panel has several holes drilled in it to accommodate the hand shaft and winding arbors for the clock movement.

Laying out these holes is simply a matter of centering the clock dial on the plywood panel, screwing it in place, and marking out the hole locations, see detail 'a' at right. Then with the dial removed, drill the holes slightly oversize. (This allows for some adjustment when the movement is installed later on.)

To make the slot on the right side of the dial for the chime selector lever, I simply drilled a series of overlapping holes, see drawing.

ASSEMBLY. To assemble these pieces, glue the front panel into the grooves cut on the side frames. The back panel doesn't get glued to the sides, but I did set it in place just to keep everything square. A couple of band clamps will hold the pieces while the glue dries.

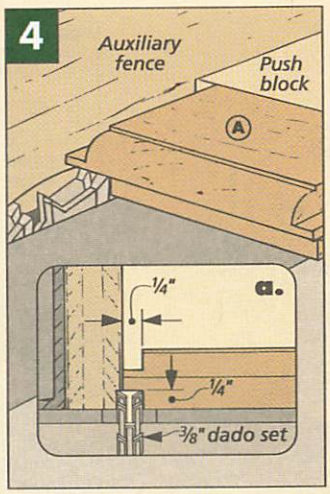

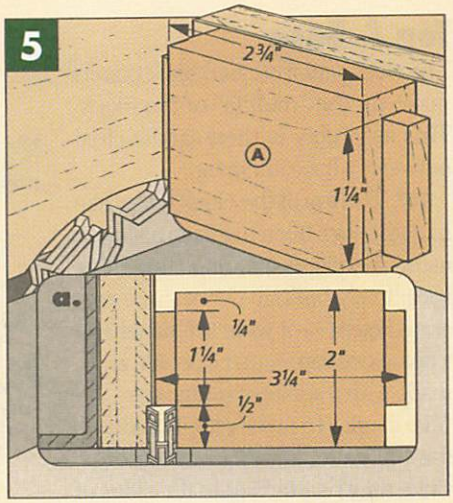

▲ *The ends of the molded edges are mitered to allow the rails and stiles to fit together.*

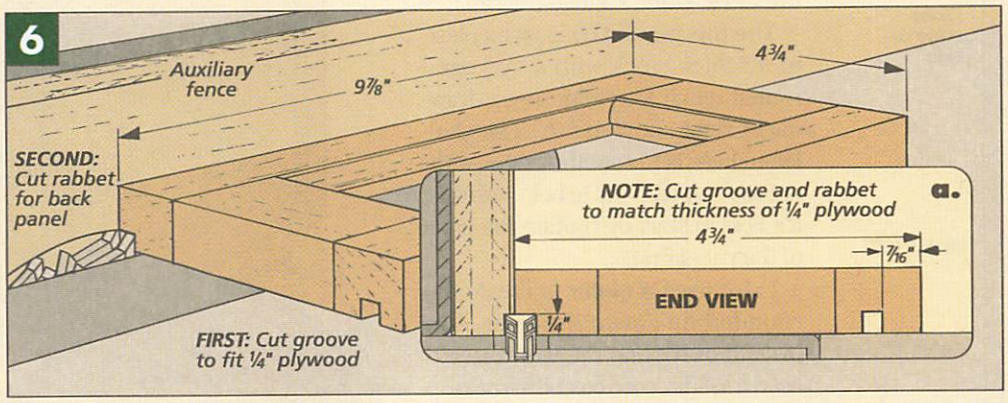

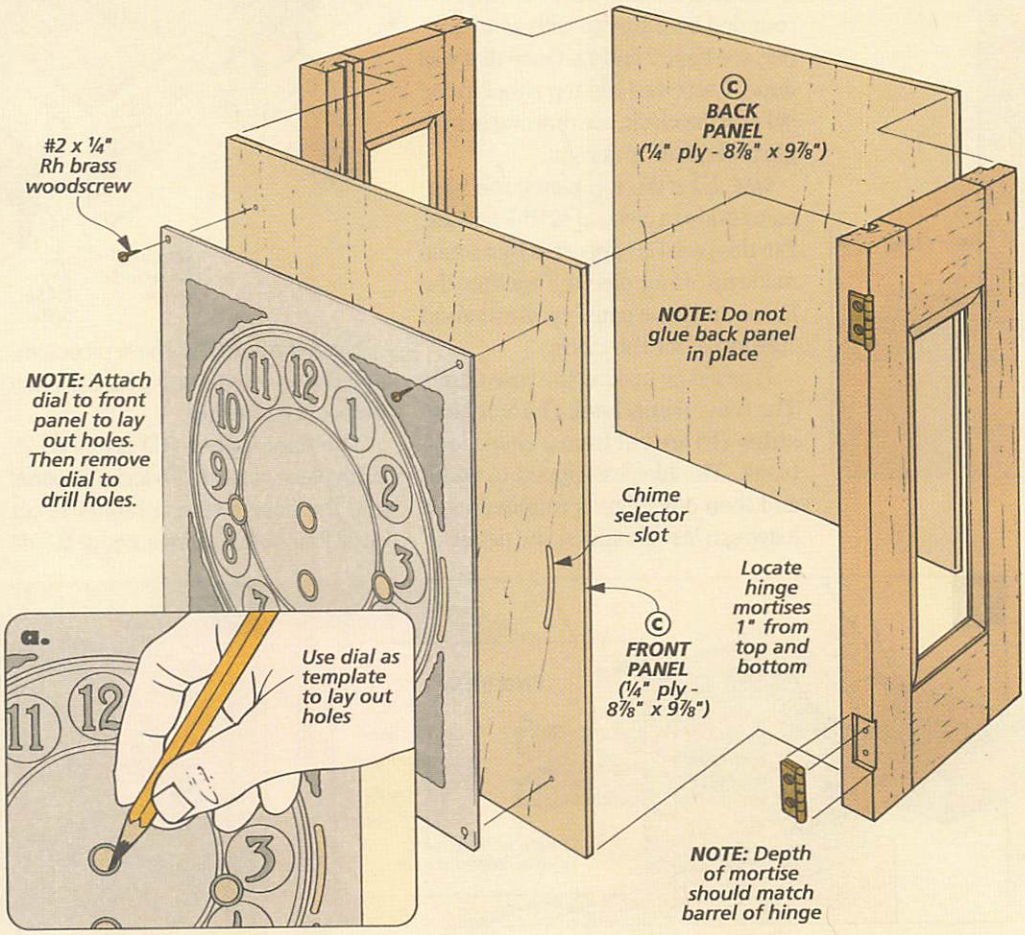

Top & Base

The sides and front and back panels make up the "middle" of the clock. This assembly is then sandwiched between a base and a top.

TOP. The top of the clock looks like it might have been made on a shaper using a massive molding cutter. But it's actually built up out of three separate layers — a wide top panel and a two-piece cap. And the profile is made with a series of router bits (five in all). To start with, I made the top panel and base assembly, since they're attached to the sides of the clock. Later, I added the cap.

The **top panel (D)** is just a piece of 3/4"-thick stock with a 5/32" ogee routed on all four edges, see drawing at right and detail 'b'. The challenge here is to rout the edges without any chipout. And to help with this, it's best to start by routing the ends of the panel first.

I also used a router to create the rounded lip above the ogee. But instead of routing the workpiece, I used a 1/4"-dia. core box bit to make a sanding block. Then I simply rounded over the lip with sandpaper, see Figs. 7 and 7a. Once that was done, I screwed the top panel to the sides of the clock, see drawing in margin and detail 'a' at right.

BASE. Like the top panel, the base panel is also a piece of 3/4"-thick stock. But this panel is supported by a frame made up of four pieces. Together, the frame and base panel create a raised "platform" for the clock.

I started by making the base frame. The **base front/back (E)** and **base sides (F)** are cut from a single long blank. The blank is ripped to width and then one edge is rounded over, leaving a 1/16" shoulder, see detail 'c.'

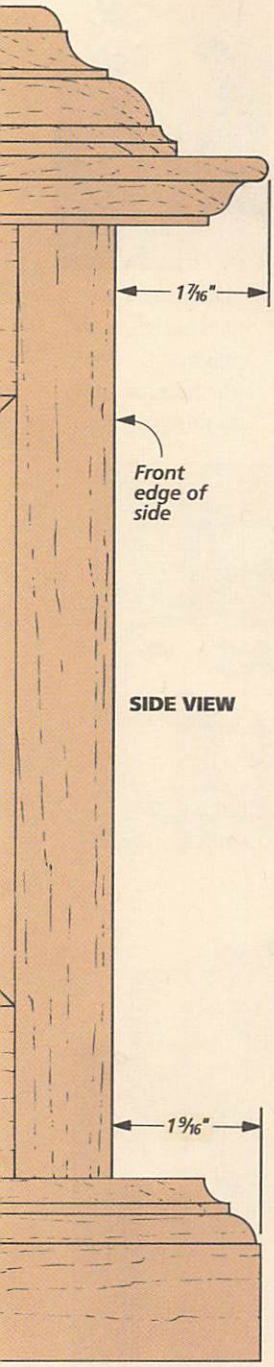

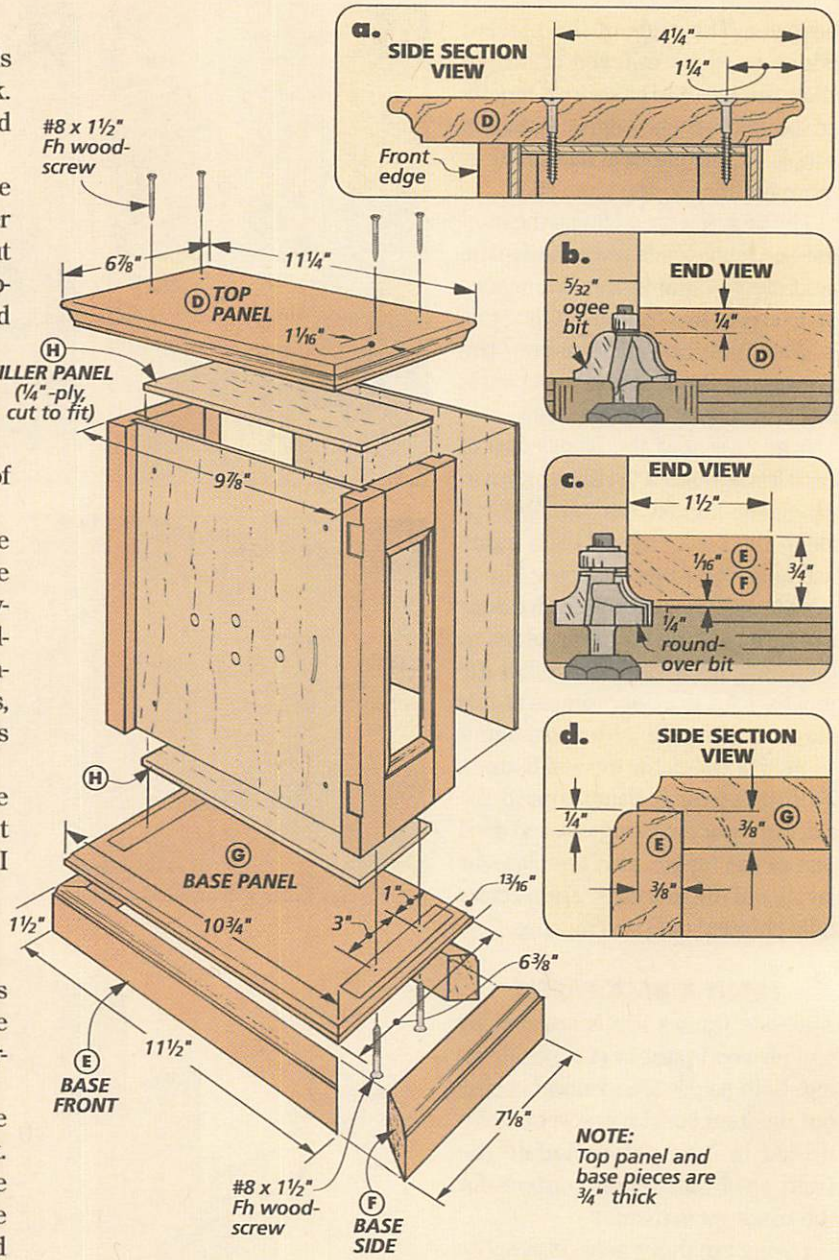

Next, the individual base pieces are mitered to length and glued up in a frame, see drawing.

The **base panel (G)** is just a 3/4"-thick piece of stock. To lock the panel into the base frame, a rabbet is cut on all four bottom edges, see detail 'd.' Then a 1/4" cove is routed on the top edge, see Figs. 8 and 8a. After the panel is glued to the frame, the base can be screwed to the clock sides.

FILLER PANELS. Before moving on to making the top caps, I glued in a couple of **filler panels (H)** to the inside

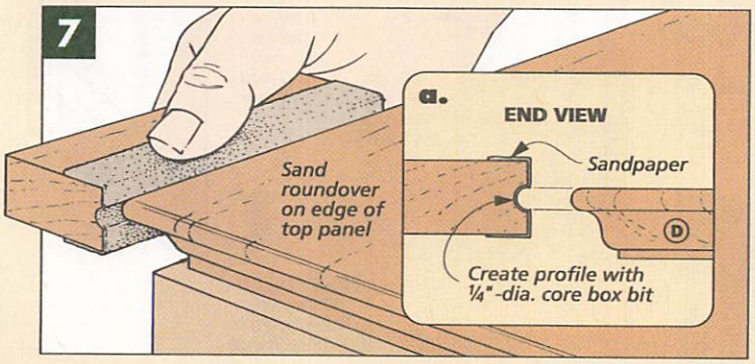

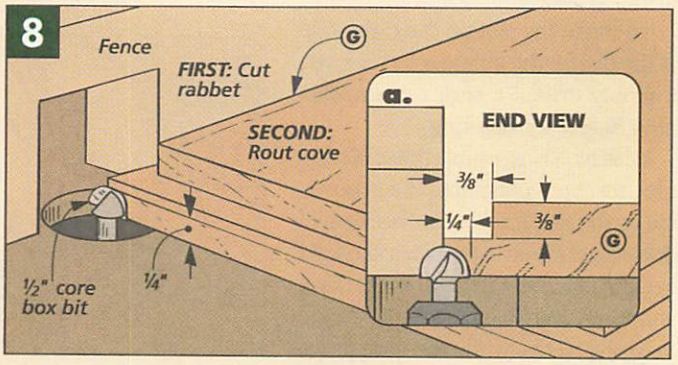

of the clock at the top and bottom, see drawing. These panels are simply two pieces of 1/4" plywood cut to fit the inside of the clock. They serve as stops for the back panel.

CAP. All that remains to complete the case of the clock is to add the cap to the top of the clock. The cap is made up of two 3/4"-thick pieces, each with a different profile routed on the edge. The profiles look a bit complex, but actually I used only a couple of different bits on each cap piece.

I made the **lower cap (I)** first. The profile on this piece consists of a 1/2" roundover above a shallow cove. To make this profile, I cut the roundover first, see Figs. 9 and 9a. In order to do this, you'll have to stand the workpiece on edge on the router table. In order to provide a little more support and to prevent the workpiece from tilting, I used the fence on my router table — even though the round-over bit has a bearing.

After cutting the roundover, I routed the cove using a 1/4" core box bit, see Figs. 10 and 10a. This time you can place the workpiece down flat. But you'll still need to use the fence as a bearing surface.

UPPER CAP. The steps for routing the profile on the **upper cap (J)** are similar, but the router bits are different sizes. First, a 3/8" cove is routed along all the edges, see Figs. 11 and 11a. Then a 1/4" roundover is routed on the top edge, again holding the workpiece on edge, see Figs. 12 and 12a.

The overall thickness of the top of the clock is nearly 2 1/2" (longer than most drill bits). Because of this, I decided to drill the holes for the handle of the clock before gluing the cap in place. I simply drilled a pair of holes in the upper cap and then transferred the hole locations to the lower cap and then to the top of the clock, see drawing above.

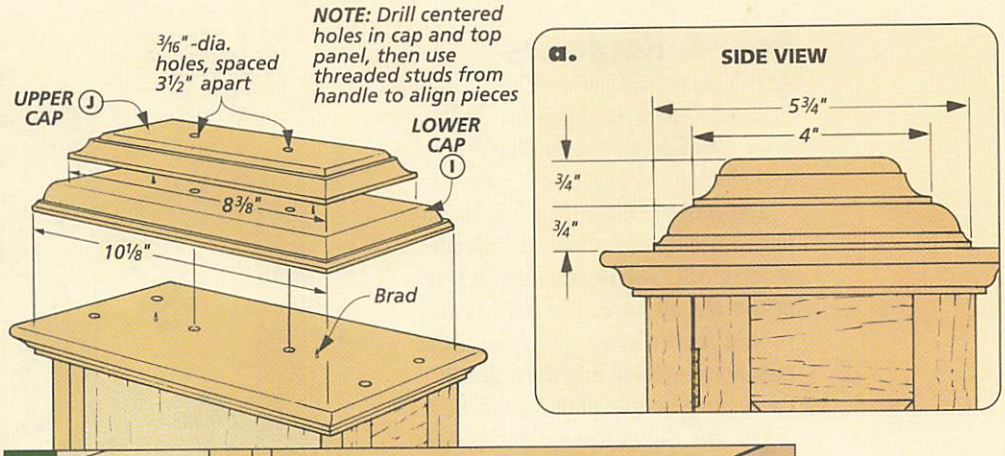

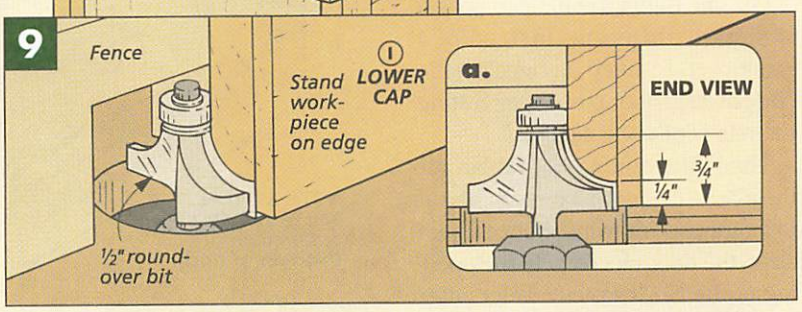

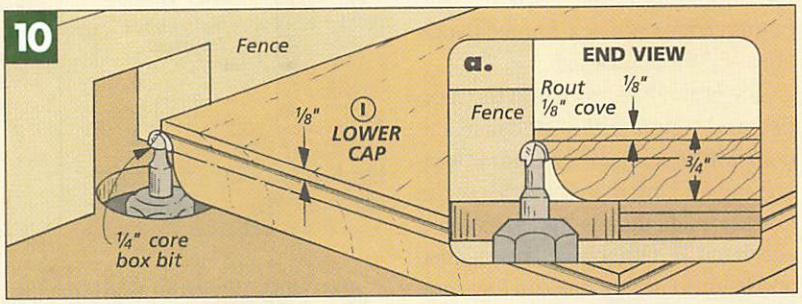

ASSEMBLY. Assembling the caps is simply a matter of gluing them to the top of the clock, centering them from side-to-side and front-to-back. But there's a couple of tricks to achieving a good result. Before starting to glue the pieces together, stack them up and check the fit. If you can see gaps around the edges, the pieces aren't flat. To flatten them out, I placed a sheet of sandpaper on top of my table saw and lightly sanded both sides of each cap (just like you would lap the sole of a hand plane).

When it came time to glue the pieces together, I used some small brads to help prevent the pieces from slipping under the pressure of the clamps. Just drive a few brads partially into the top of the top panel and the lower cap. Then snip off the heads so that about 1/4" of each brad remains, see drawing above.

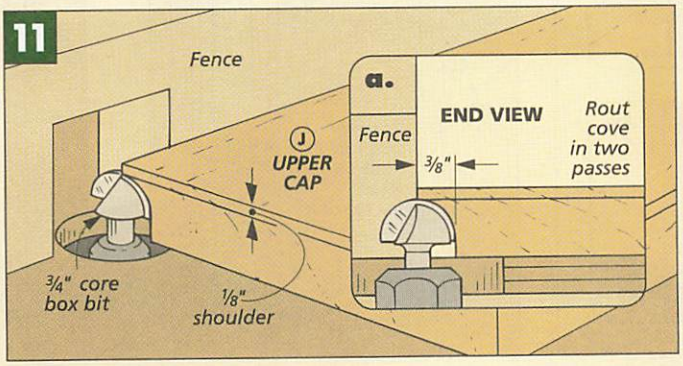

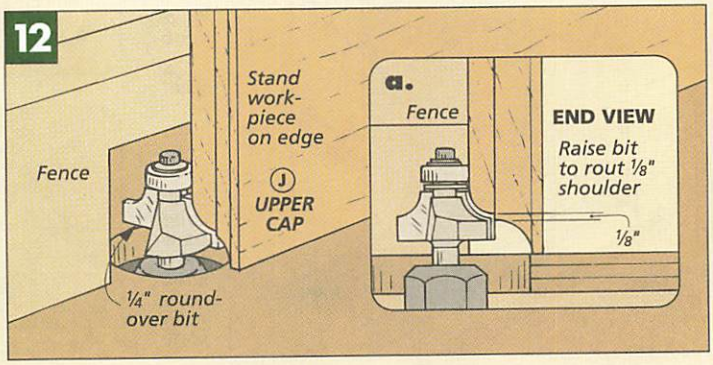

Door & Hardware

At this point, the case of the clock is finished — all that's left is to build the door and add the glass, hardware, and clock movement.

The construction of the door is similar to the construction of the sides of the clock. The **door rails (K)** and **stiles (L)** all have a molded profile routed on the inside edge. And the rails are mortised into the stiles. But there are a couple of differences.

For one thing, the molded profile is slightly different. Instead of a roundover, I routed an ogee on the edge of each door piece after cutting them to width, see detail 'a.'

Then after cutting the rabbet for the glass, the door pieces can be cut to length, see drawing. Shop Note: I sized the door pieces to fit the opening of the clock exactly. Later, after the door is assembled, the top and bottom edges can be trimmed to create a 1/32" clearance gap.

The other difference is in the mortise and tenon joints. Because the door will be subjected to more twisting and racking than the sides of the clock, I made the tenons a bit longer, see detail 'b.' Otherwise, the mortise and tenon joints are made in the same manner. And like the rails and stiles on the sides, you'll have to miter the molded edges on the door pieces.

When the joinery is finished, the door can be glued up. (Make sure to check the door for square when clamping it together.)

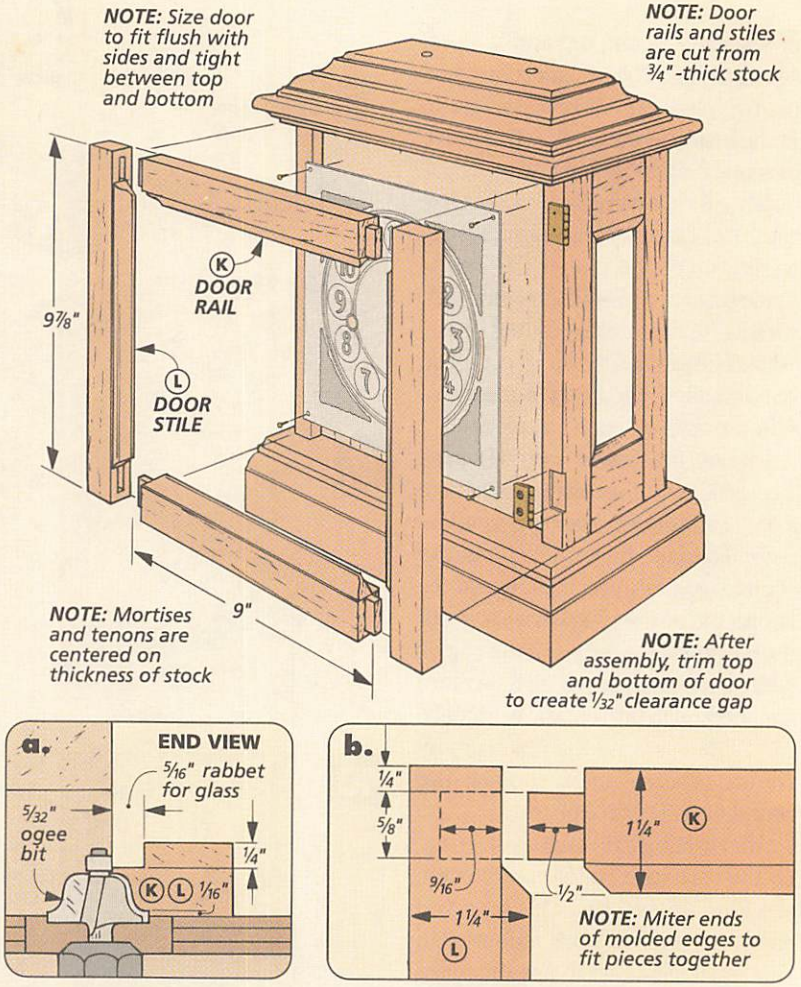

GLASS STOPS. While the glue is drying, you can make the **glass stop (M)** for the glass panels in the door and sides of the clock. This stop is 5/32" wide and 9/32" thick. After the pieces are cut to length, they are simply nailed in place behind the glass, see Figs. 13 and 14. But since the pieces are so small and there isn't much room to work inside the clock, I pre-drilled holes in the glass stop for the brads.

HANGING THE DOOR. With the glass in place, you're just about ready to hang the door. But there are a couple of things to take care of first. To start with, you'll need to trim the top and

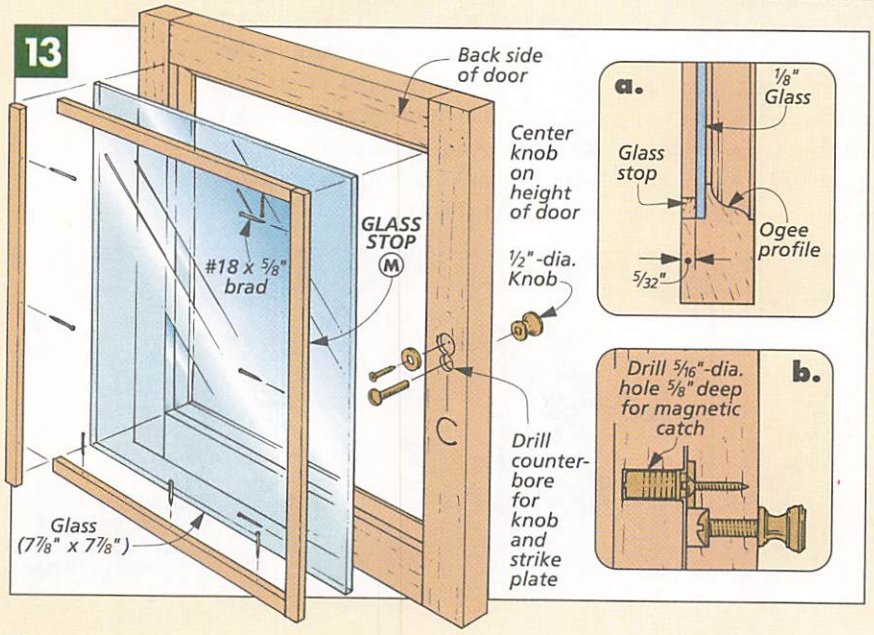

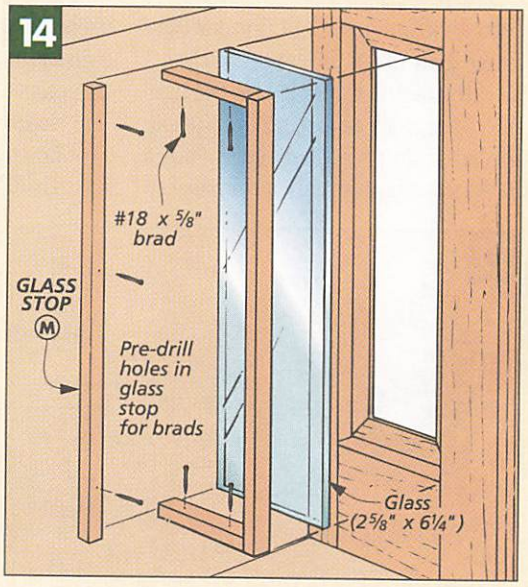

bottom of the door to create a slight (1/32") gap between the door and the case of the clock.

Second, you'll need to drill a couple of countersunk screwholes for the door knob and the strike plate of the catch, see Fig. 13b on the opposite page. Once this is done, you can mount the hinges on the door and the side of the clock and then install the rest of the hardware — the door knob, magnetic catch and handle.

INSTALLING THE MOVEMENT. Installing the clock movement is a matter of screwing the dial to one side of the front panel and the movement to the other side, see drawing. When positioning the movement, just check to see that the hand shaft and winding arbors are centered in the dial holes.

With the movement in place, you can set the chime rods inside the clock to determine their position. In order to raise the chime rods just below the level of the hammers, I had to make a chime rod **support block (N)**. My block was just a piece of 1/2"-thick stock cut to match the size of the chime rod base. I lightly chamfered the top edges of the block and then drilled a couple of countersunk screw holes on the underside of the block for the mounting screws. With the chime rods screwed to the block, I then screwed the block to the bottom of the clock case from underneath the clock, see drawing in margin.

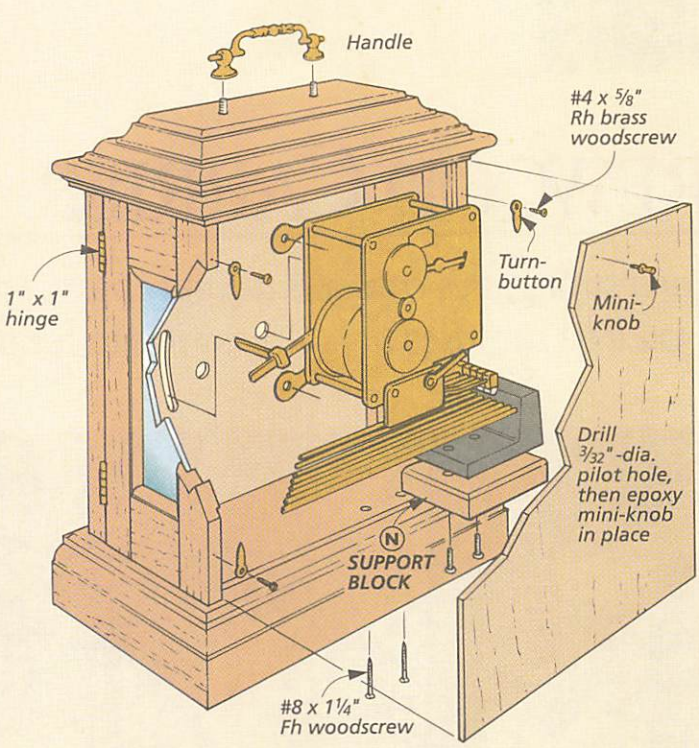

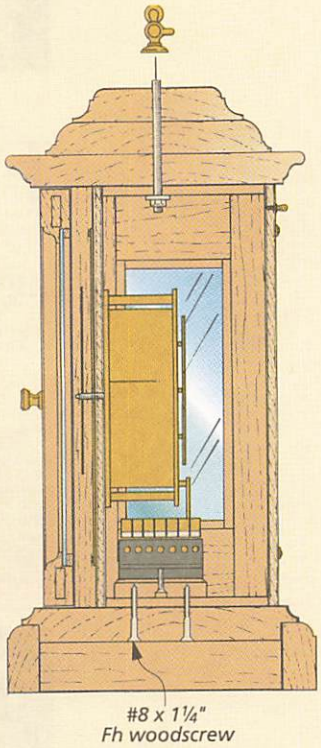

CROSS SECTION

BACK. The back of the clock also gets some hardware. First, a small, "mini" knob is added to the back to make it easier to take on and off, see drawing. Then, four brass turnbuttons are added to the sides of the clock to hold the back panel in place. W

QUARTZ MOVEMENT CLOCK

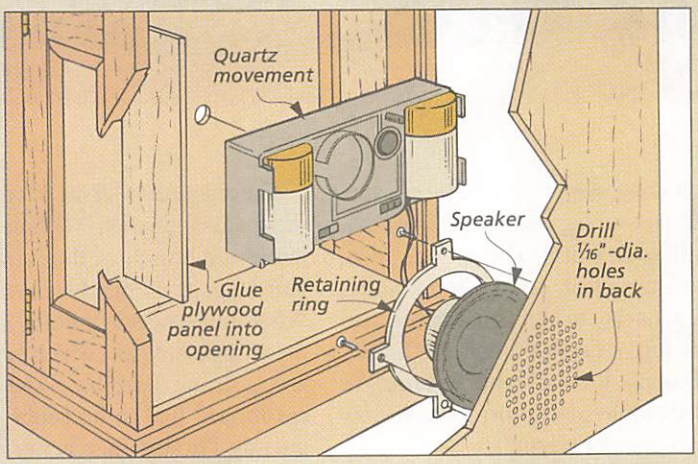

If you're planning on using a quartz movement in this clock, there are a couple of things you should know before you start building.

For one thing, since quartz movements don't need winding, you'll only need to make one hole in the front panel (for the hand shaft).

And since there's not much to look at with a quartz movement, the glass panels on the sides of the clock can be replaced with 1/4"-thick plywood panels. These are simply glued into the openings.

SPEAKER. The quartz movement that I used has a separate speaker for the "chimes." And in order to allow the sound from the speaker to "escape," I drilled a number of small (1/16"-dia.) holes in the back panel of the clock. Then I mounted the speaker to the back panel using the screws and retaining ring supplied with the movement.

FIREWOOD CARRIER

Light and strong, this carrier is a handy project for a cold winter evening. And you'll be surprised at how easy it is to bend the wood "ribs."

As a boy, stepping outside on a winter evening was like stepping into a different world. The air was crisp, the stars clear, and I almost didn't mind having to lug a small cardboard box full of firewood into the house. Of course, it wasn't really a chore. We used our fireplace more to make popcorn than for warmth.

I'm still the one that carries in the firewood. But I recently traded in my box for this firewood carrier.

With a box, there's always at least one log that's an inch or so too long. So when sketching ideas for this carrier, I wanted an open design. But more importantly, it had to be light enough to be carried easily and strong enough to hold a few good-sized logs.

The solution to all these concerns was bent lamination. With bent lamination, a bunch of thin strips are glued together around a curved form. What this means is that the grain in the strips bends too, which produces a very strong assembly. So where the cardboard had to be replaced frequently, I'm sure this carrier will last a generation or two.

BENT LAMINATION. Bending thin strips isn't difficult. It's certainly not something reserved for the "master craftsman." The first thing you need is a bending form you can make yourself. This is easy to make, see the step-by-step instructions on page 17. Besides that, all you need is a table saw for ripping thin strips and some clamps. (Check out the article on bent lamination that starts on page 18.)

RIPPING THIN STRIPS. With the bending form made, the next step is to rip the thin strips that make up the **ribs (A)**, see Fig. 1. (I used ash.) I started with a piece of 4/4 ("four-quarter") stock that was 48" long. 4/4 stock is actually 13/16" thick, and I usually plane it to an even 3/4". But this time, I waited until after the strips were glued together before planing it down. (You can start with 3/4"-thick stock — your ribs will just end up a little thinner.)

The bends in the ribs of this carrier are pretty tight, so the strips are ripped 1/16" thick, see Fig. 1a. And you'll need *about* twelve of these strips to create each 3/4"-thick rib, see

Fig. 1b. (The exact number you'll end up needing will depend on the thickness of your strips.)

Safety Note: Ripping thin strips on the table saw is a common procedure, but there's also a good chance for kickback. So to avoid this, I used a special auxiliary fence and push block, see Fig. 1 and page 26.

SOAK STRIPS. Even at 1/16" thick, I was afraid the strips would break as they were bent around the form. So to make the wood more pliable (and to make it easier to muscle the strips against the form), I soaked them in water for an hour or so. Of course, the strips were too long to fit in a sink, but the bathtub worked well.

PRE-BENDING. With the wood more pliable, I clamped the strips into the form — without applying any glue. This "pre-bending" stretches the wood fibers so they'll bend later without breaking. And it also allows you to see just how to apply the clamps (and in what order) so all the laminations are pulled tight.

When clamping, I started at the center of the form and worked my way out. (This "dry" assembly is good practice for when it's time to glue the laminations together, see photo.)

GLUE STRIPS. After the wood dried, I took the pieces out of the form and then glued them together. I used polyurethane glue and ran a small bead on one side of each piece, refer to the article on page 18. Gluing up the pieces is much easier with the wood pre-bent, but it's still a bit messy.

After the glue had dried, I removed the assembly from the form. (Let it set overnight or longer, if possible.) Then I glued the second rib. Note: While working on the second rib, clamp a spacer in the first rib to help keep its shape, see photo below. (The laminations tend to straighten out a little as the glue dries.)

With both ribs glued up, the excess glue can be scraped off, and the edges trimmed flush. To hold the assembly during this process, I put the rib back into the form and screwed the outer forms in place. Then I scraped off the glue and planed the edges flush with a block plane, see Fig. 2.

There's one last thing to do before removing the rib from the form, mark the ends of the rib from the cut off lines on the form, see Fig. 2a. Then you can cut off the waste on the ends with a hand saw or band saw.

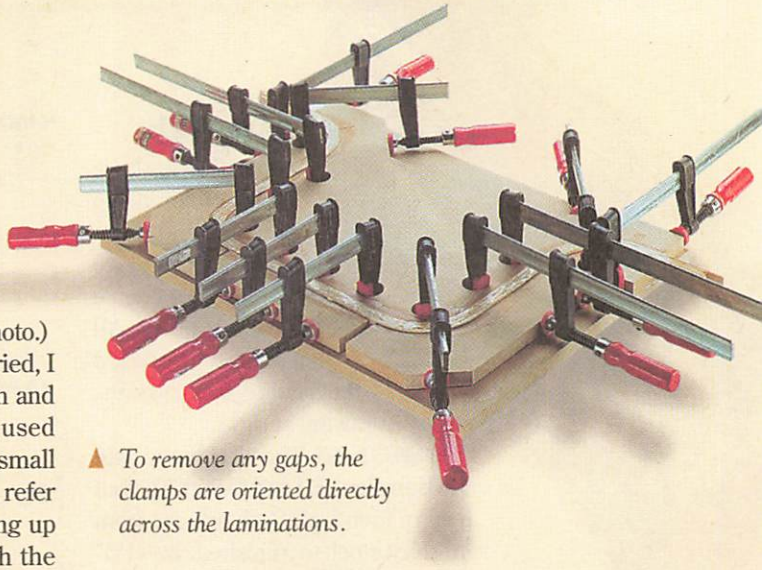

▲ *To remove any gaps, the clamps are oriented directly across the laminations.*

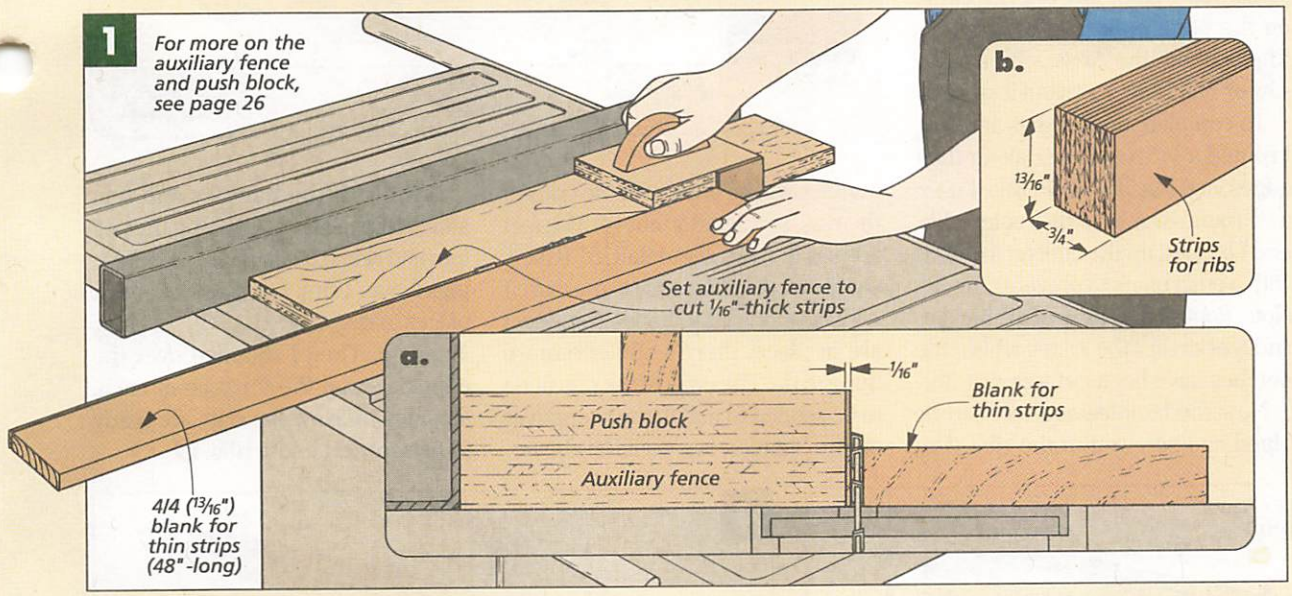

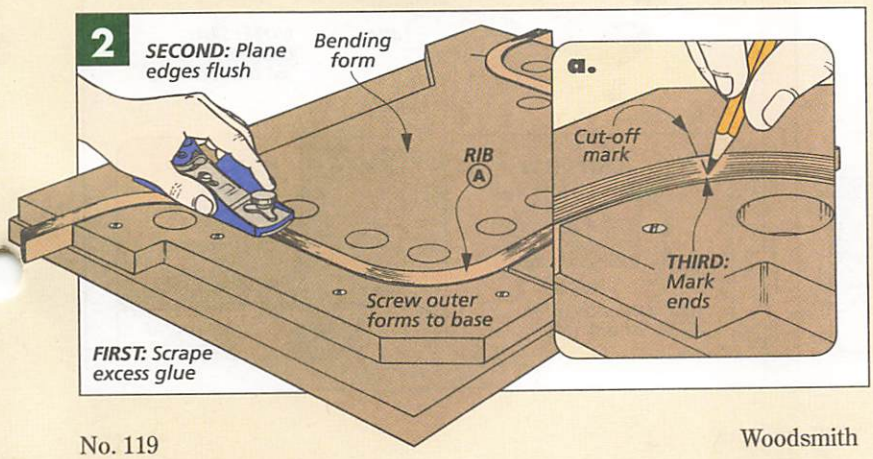

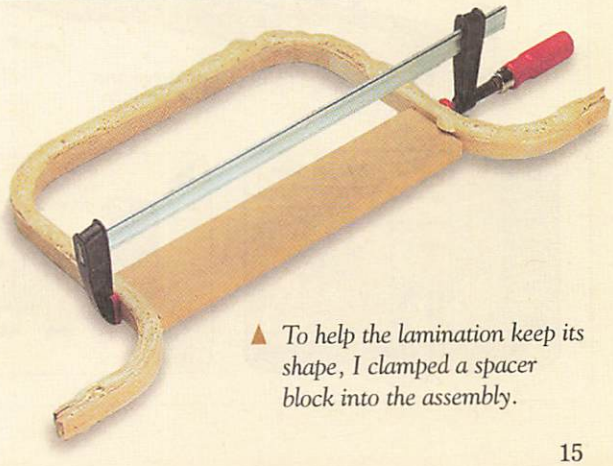

▲ *To help the lamination keep its shape, I clamped a spacer block into the assembly.*

Assembly

When the ribs have been cleaned up and their ends have been trimmed to final length, you're just about done. All that's left to do is add the handles, feet and slats, see drawing at right.

HANDLES & FEET. The nice thing about the **handles (B)** and **feet (C)** is that they're identical. Both are cut from ¾"-thick stock to a finished size (1½" x 13½"), see Fig. 3.

The handles and feet hold the ribs parallel, see drawing at right. To do this, I cut a notch on the ends of each, see Figs. 3 and 3a. The height and width of these notches will depend on the final height and width of the ribs. (Mine were ¾" x ¾", but it's a good idea to sneak up on the fit.)

After the notches on the ends have been cut, the next thing to do is cut a gentle curve on each handle and foot piece, see Fig. 3. Lay out the curve on the edge *opposite* the rabbets. Then cut out the curve with a sabre saw or band saw and sand it smooth.

To complete the handles and feet, I routed a ¼" roundover along their edges, see Fig. 3b. To do this, I used a ¼" round-over bit in the router table, and I backed up the cuts on the ends with a push block to prevent chipout. Note: Rout all the edges of the handles and feet *except* the edges where the notches have been cut, see Fig. 3b.

Now the handles and feet can be glued and screwed to the ribs. The handles will be flush with the ends of the ribs, see detail 'a' above. The feet are set in 3½", see detail 'b.' (Use a square to make this easy to measure.)

Even though the handles and feet are in place, there's still one more thing to do. The ends of the ribs need to be sanded to match the roundover on the handles, see detail 'a' above.

SLAT. With the handles and feet attached, the **slats (D)** along the bottom and sides can be added, see drawing above. I first cut these ½"-thick pieces to size (1½" x 14¼"), see Figs. 4 and 4a. Then I rounded over the edges around the top face of each, see Fig. 4b. Now the slats are ready to be screwed to the ribs. W

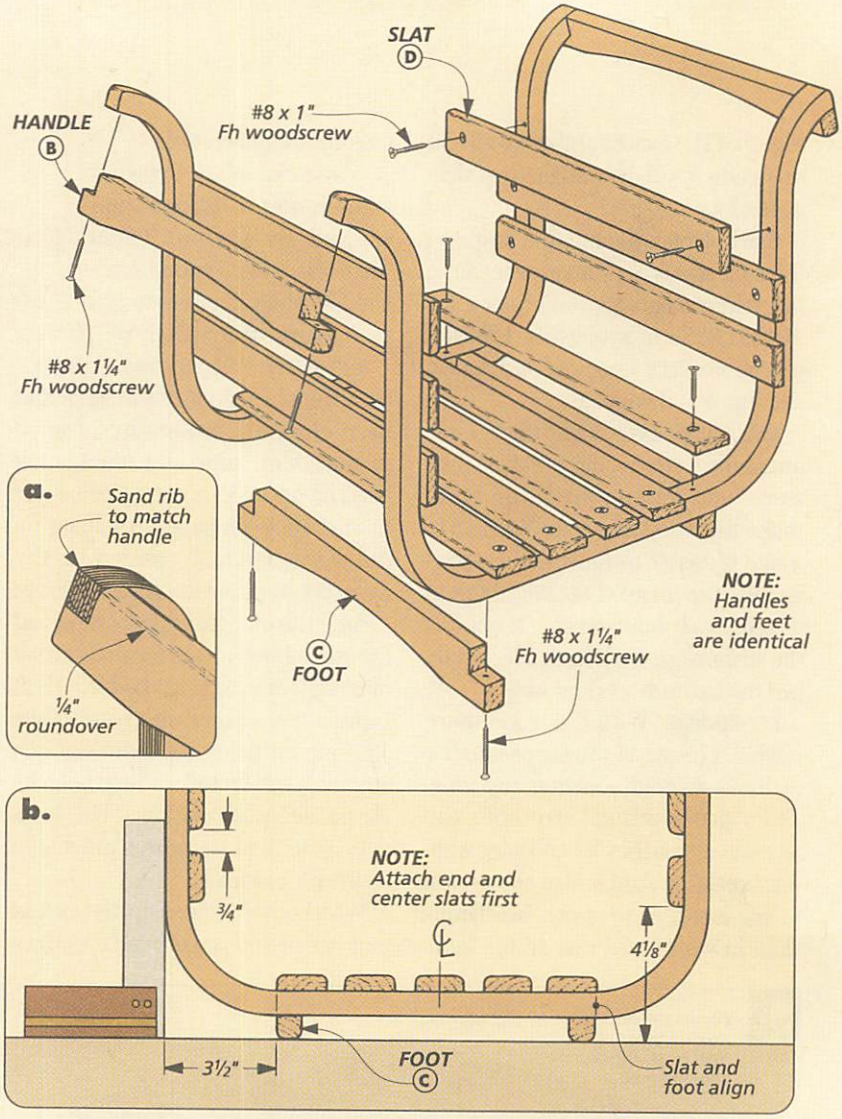

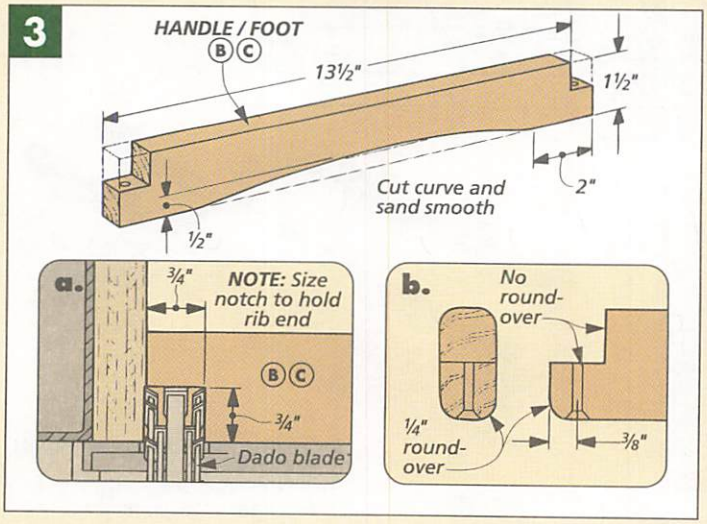

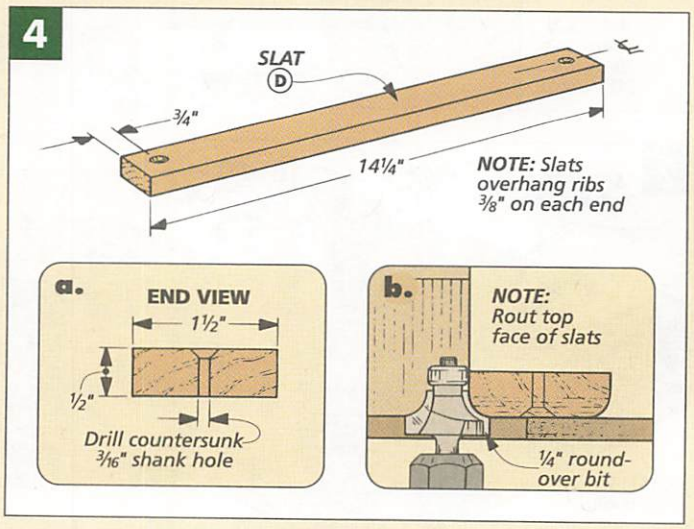

RIB FORMS

Before working on the ribs of the firewood carrier, you'll need to build the forms for bending the thin strips. These bending forms are made up of three parts: the curved inner and outer forms will sandwich the thin strips, and a rectangular base supports these pieces, see drawing at right. Note: For more on making and using bending forms, see the article beginning on page 18.

MDF BLANK. The first thing to do is make the inner and outer forms. These are cut from a single blank of ¾"-thick MDF (16¾" x 23½"), see Fig. 1. I laid out both forms on this blank with a "channel" between them. This ¾"-wide channel is cut out to make room for the ¾"-wide strips. This way, the inner and outer forms will sandwich the strips perfectly and prevent any gaps in the laminations.

CUT FORMS TO SHAPE. I cut out the forms with a sabre saw, staying to the waste side of the layout lines. Then I carried the forms over to the drill press and used a drum sander to sand the curved edges smooth. This procedure is easy, but do take care. The better the inner and outer forms match your layout, the better you'll be able to clamp the laminations together later.

Cutting the curves isn't the only work to do on these forms. I also drilled a number of holes to hold the heads of the clamps during assembly, see Fig. 2. Plus, I cut several angles and notches along the outside edges of the forms. These allowed me to direct the clamps so the pressure was directly across the thin strips.

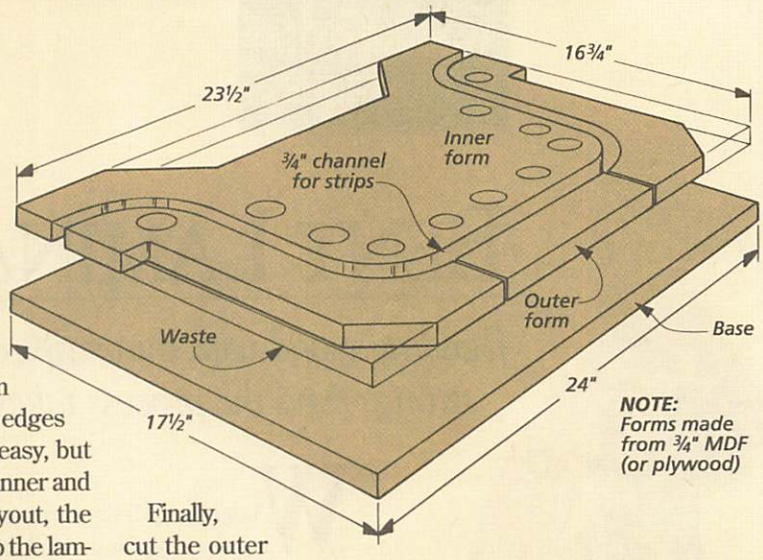

Finally, cut the outer form into three pieces, see Fig. 2. This way, you will be able to work from the center out.

ADD BASE. Now the base can be cut to finished size — 17½" x 24", see drawing above. I glued the inner form to the base. Then I "finished" the forms with a heavy coat of wax so the wood strips wouldn't be glued into the forms permanently.

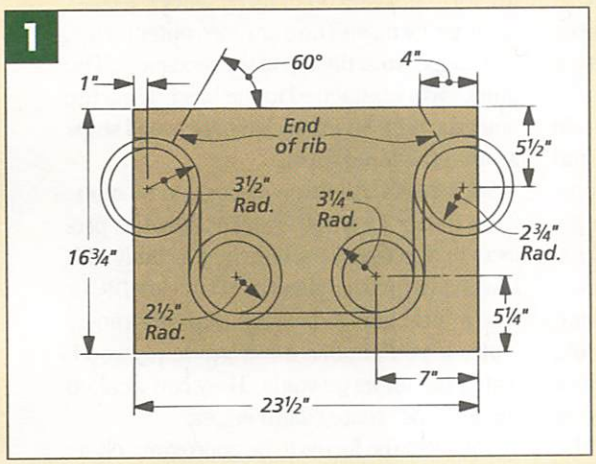

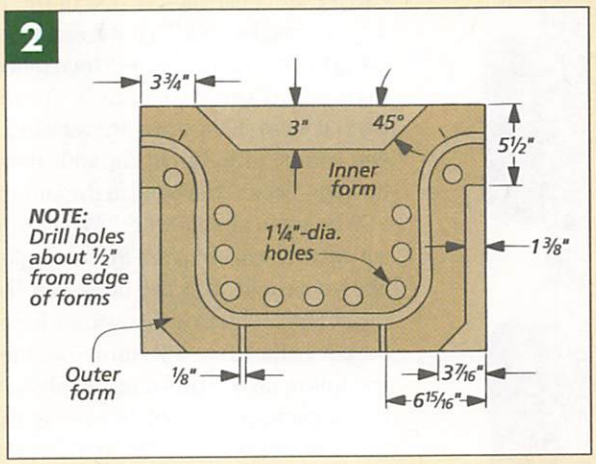

MATERIALS & SUPPLIES

A Ribs (24)	1/16 x ¾ - 48	**C** Feet (2)	¾ x 1½ - 13½
B Handles (2)	¾ x 1½ - 13½	**D** Slats (11)	½ x 1½ - 14¼
• (8) #8 x 1¼" Fh Woodscrews		• (22) #8 x 1" Fh Woodscrews	

CUTTING DIAGRAM

½" x 5½" - 60" Ash (2.3 Sq. Ft.)

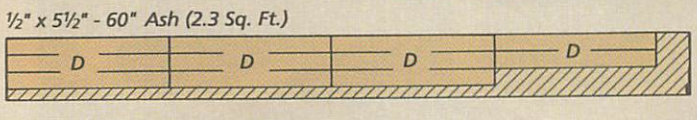

¾" x 1½" - 60" Ash (.6 Bd. Ft.)

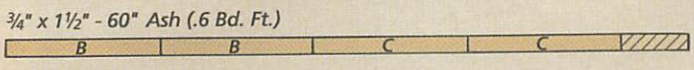

¾"* x 4½" - 48" Ash (1.5 Bd. Ft.)

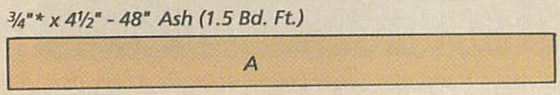

*(13/16" actual thickness)

¾" x 24" - 48" MDF

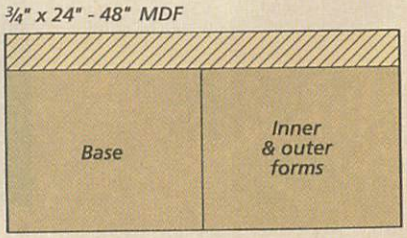

BENT LAMINATION

Bending wood with thin strips creates graceful curves that are surprisingly strong. And the process takes less time than you might expect.

Whenever I show someone a project that involves bending wood, I usually get the same response: "It looks great, but I don't think I'd have the time to tackle it." Somehow, bending wood looks time-consuming and a bit difficult. But looks here are deceiving — especially with the bent lamination used to build the firewood carrier and coat rack in this issue. In fact, these projects would be "weekend projects" except that you have to give the glue a chance to dry.

The process we used to build the firewood carrier and coat rack is one of the easiest ways to bend wood. To put it simply, a piece is ripped into thin strips and then glued back together as the strips are bent around a curved form. Thin strips are very flexible so you can bend tight curves with them, and the glue "locks" the bend in the laminations.

Why go to all this work? Why not simply cut out each curved piece from a single blank, like you could with the hooks on the coat rack? The problem is that somewhere along the curve the grain will run across the hook, and this point will be weak, see photo below. By laminating each hook from several pieces, the grain essentially "wraps" around the curve, creating a much stronger piece.

Besides being strong, I also like bent lamination because it doesn't require any special tools. The thin strips can be ripped on the table saw. And the bending forms can be built quickly, using plywood or MDF. All you need are a dozen or so clamps and some glue. (Quite a bit of glue, actually.)

MAKING THE FORMS

The first thing to do with any bending project is to build the forms. They distribute the clamping pressure along the strips so you don't end up with any gaps. Basically, a bending form is made up of three pieces: a base, an inner form, and one or more outer forms, see the photo at the top of the next page. The inner form is attached to the base. Then the outer forms are used to clamp the wood strips around the inner form.

SHEET GOODS. All three pieces can be made from either plywood or MDF. For the projects in this issue, each form was built with less than a quarter sheet of ¾"-thick MDF. (It was a little less expensive than plywood.) Note: If you choose a low-grade plywood, watch out for large voids. They can weaken the form or create rough edges.

You want the forms to be approximately as thick as the wood strips you're going to bend. This way, the clamping pressure is distributed

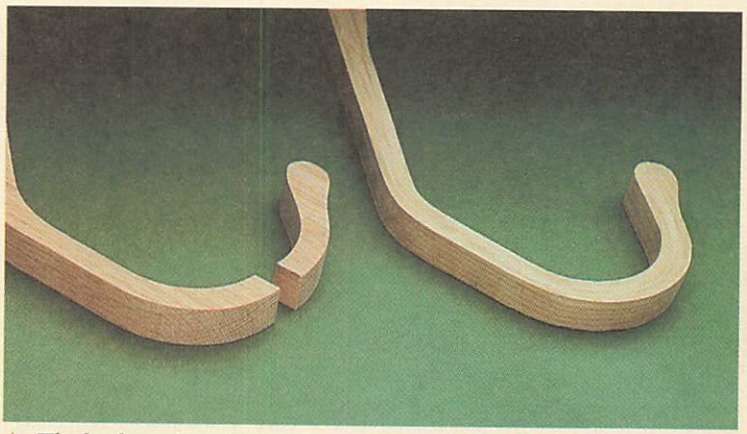

▲ *The hook on the left was cut out of a single board. It broke where the grain ran across the hook. The right hook, made with a number of thin strips, is much stronger — the grain "bends" around the curves.*

evenly across the thickness of the stock, and you're less likely to end up with gaps on the outside edges.

But for the projects in this issue, my forms were slightly shorter (1/16") than the thickness of the strips. This wasn't a problem, but if you're using thicker stock, you can build up the forms by gluing two pieces of MDF together before cutting them to shape.

LAYING OUT THE FORMS. When creating the inner and outer forms, the goal is to get a fit that's tight and consistent along the entire length of the strips. If the forms don't fit well, there's a good chance you'll end up with small gaps in your laminations.

So to make sure the inner and outer forms match, I lay out both of them on the same blank. And when doing this, you'll need to allow for the thin strips that will be sandwiched between the forms, see Fig. 1. (For the log carrier, there was 3/4" between the inner and outer forms. For the coat rack, 1/2".)

ALLOWING FOR CLAMPS. With the inside curves laid out, you also have to figure out how to clamp the inner and outer forms together.

For the heads of the clamps (usually on the inner forms), I drill a series of holes parallel to the curved edge after the forms are cut out, see Fig. 2. (Size the holes large enough to hold the head of your clamps.)

Then on both forms, you'll probably have to do some work on the outside edges too. The clamps should apply pressure straight across the strips as much as possible, see Fig. 2. This means laying out angles and creating shoulders on the forms near the areas where the strips bend.

With the layout of the forms complete, they can be cut out with a sabre saw (or band saw), see Fig. 1. Stay on the waste side of the layout line. Then sand the edges smooth with a drum sander in the drill press. I also cut the outer form into separate pieces so it's easier to work with.

Finally, I drill the holes for the clamp heads. (My clamps required 1 1/4"-dia. holes.) I don't bother to lay them out. Instead I drill them about a 1/2" from the curved edge. And don't space them too close together which could weaken the form.

ATTACHING FORMS TO BASE. With the forms cut to shape and the holes for the clamps drilled, I attach the inner form to the base. The base is sized to support both the inner and outer forms when the strips are clamped in place. It should be a little oversize — but not too much. Otherwise, you'll find yourself scraping your knuckles as the clamps are being tightened.

After the base is cut to size, the inner form can be glued to it. Note: The coat rack form is screwed to the base — not glued, see page 25.

GLUE BARRIER. The forms aren't complete quite yet. You're going to need a barrier between the forms and the strips so they're not glued together permanently. To do this, I used wax to "finish" my forms, see photo below. Then when the strips were glued together, I was able to carefully pry them out of the form. Note: For a more effective barrier and a longer-lasting form, you can apply a coat or two of polyurethane or varnish and then a coat of wax.

Keep the wax handy. After each use, you'll need to scrape away the excess glue and apply another coat of wax to the forms.

▲ *A bending form is simply a base (A) with an inner form (B) glued to it, and an outer form (C) that sandwiches the wood against the inner form.*

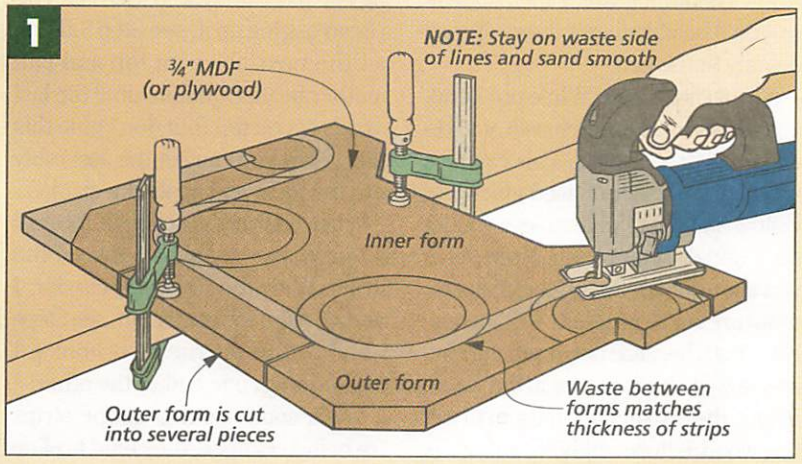

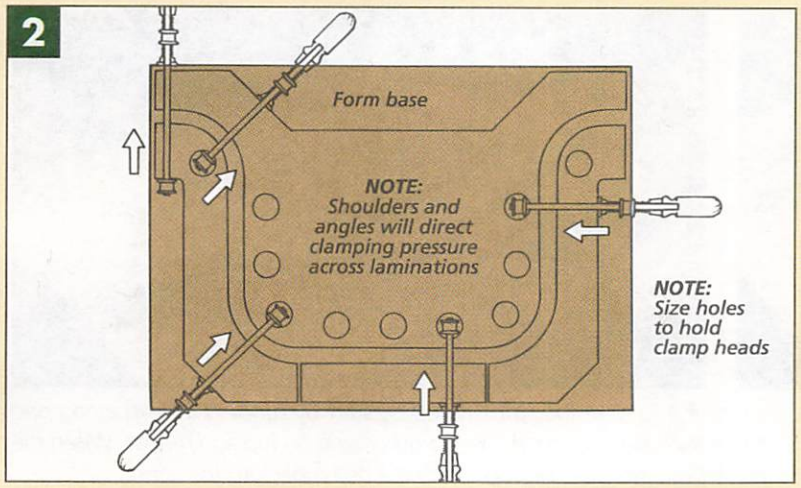

▲ *To prevent gluing the strips to the form, I brushed on a heavy coat of wax. (It was softened with turpentine. Note: Do not heat the wax — it's flammable.)*

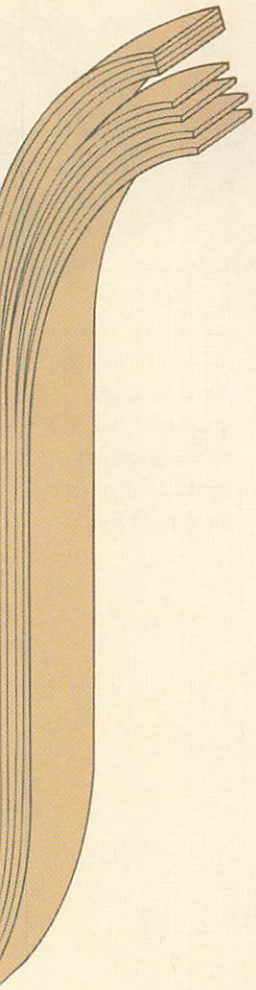

Making the Laminations

Though you haven't technically started working on the project yet, don't worry. From here on out, things progress pretty quickly, and you'll be wrapping glued-up strips around the bending form in no time.

RIPPING THE STRIPS

With the forms built, you're ready to rip the thin strips, see Step 1. Just about any hardwood can be used — as long as the grain is reasonably straight and there are no knots.

What's more important is the thickness of the strips. I like to work with as few strips as possible. So I try to keep them as thick as I can. But with tighter curves, you'll need thinner strips (and more of them).

TEST STRIP. I start by cutting a test strip. If it breaks when bent around the form, I cut a thinner strip and try again. And remember, 1/32" can make a *big* difference. Note: I don't rip strips any thinner than 1/16". If 1/16" strips break, I "pre-bend" them, see below.

RIPPING THIN STRIPS SAFELY. When ripping thin strips, having the rip fence close to the blade is an opportunity for kickback. So to avoid this, I use a shop-made auxiliary fence and push block. And as an added prevention, I use a table insert with a splitter in back. (See page 27 for more on this.)

PRE-BENDING & GLUING

With the tight curves on the firewood carrier and coat hooks, even 1/16"-thick strips would crack as I pulled them around the form — the bend was just too tight. So I "pre-bent" the wood first, see Step 2. This is a lot like dry assembling a project — only the wood is wet, which allows its fibers to stretch. To do this, I soaked the strips in the bathtub for an hour or two. Then I clamped the strips around the form and let them dry overnight.

Shop Tip: Before taking the pre-bent strips out of the form, I marked the centerline of the form across the strips. Then when gluing them together, you'll be able to get them aligned quickly in the jig.

POLYURETHANE GLUE. While pre-bending allows for tighter curves, you do end up with wet wood. This can be a problem with water-based glues like yellow and white glue unless you let the wood dry completely. However, if you use a polyurethane glue, the extra moisture isn't a problem — it's a benefit. That's because polyurethane glue reacts *with* the moisture in the wood. In fact, the instructions tell you to wet the wood before applying the glue. So I didn't have to let the wood completely dry before gluing it up.

Note: Regardless of what type of glue you choose, be sure to have plenty on hand. You don't want to run out in the middle of an assembly.

GLUING THE STRIPS. Gluing up the strips is a rather messy affair — all those strips require a lot of glue that squeezes out all over. I started by laying one piece down and then running a bead of glue on it, see Step 3. Then set the next piece on top and run another bead. Continue until the last strip is set on top (but don't glue this one). Now you can set the assembly into the form and apply the clamps.

When applying the clamps, the goal is to remove any gaps between the strips. With the firewood carrier, I worked from the center out, see Steps 4 and 5. But for the coat hooks, I worked from one end to the other.

You'll soon see that as the strips are being clamped, they tend to slide

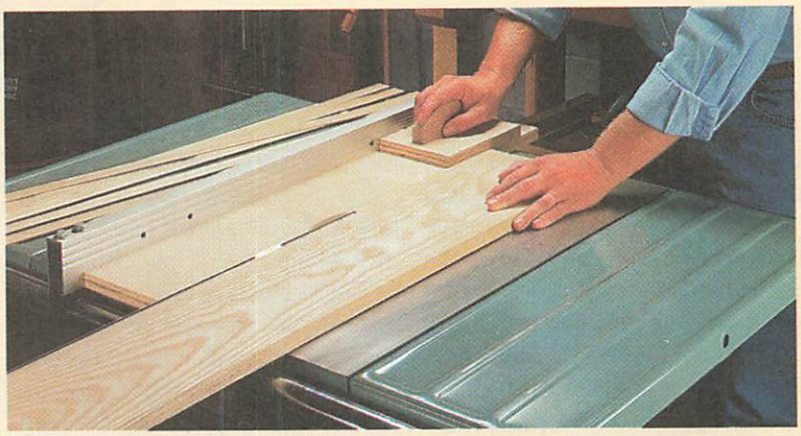

1 *With the forms built, the thin strips for bending can be ripped. Their thickness will depend on the curve — the tighter the curve, the thinner the strips. To do this safely, I used an auxiliary fence and a stop block, see page 27.*

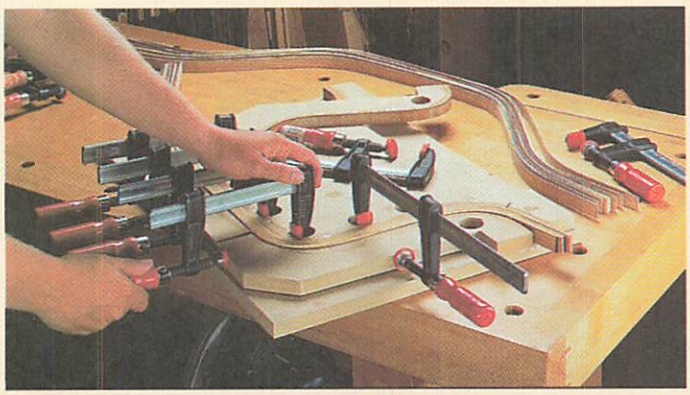

2 *Next, I soaked a set of the strips in water to make them pliable. Then to "pre-bend" the strips, I clamped them in the form. After setting overnight, mark the centerline and remove the strips.*

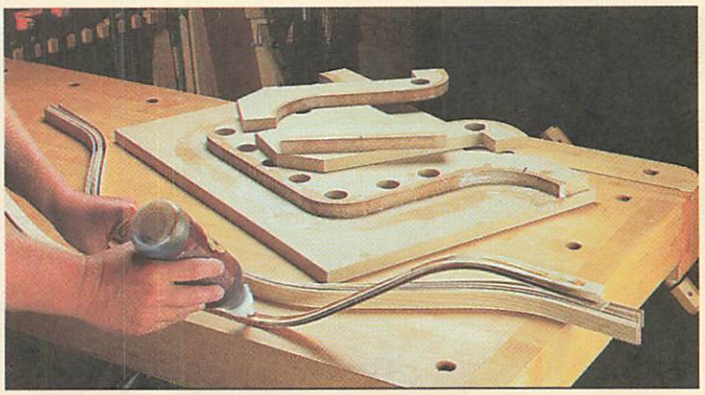

3 *To glue the strips together, start by running a bead along one side of one strip. Set another strip on top and repeat. When the last strip is set on top, place the assembly into the form.*

a little. So as you're adding clamps, it's a good idea to use a hammer and a scrap block to pound them flush, see drawing in margin. (The closer they are to being flush now, the less clean up work there will be later.)

LET GLUE DRY. When the clamps are all in place, you can step back and take a deep breath. The important thing now is to let the glue dry.

It's hard to say exactly how long you should wait before removing the clamps. But since there's only one edge exposed, it should be quite a bit longer than you usually let glue dry. With the polyurethane glue, I let the assembly stay clamped up at least eight hours (overnight if possible).

After the glue dries, gently pry the assembly out of the form. Then before gluing up the next assembly, scrape off the glue and wax the form again.

Shop Tip: When removing the assembly, the curves will tend to straighten out just slightly. So to help it keep the right shape, I clamped a spacer into the assembly until I was ready to clean up the edges, see the photo at the bottom of page 15.

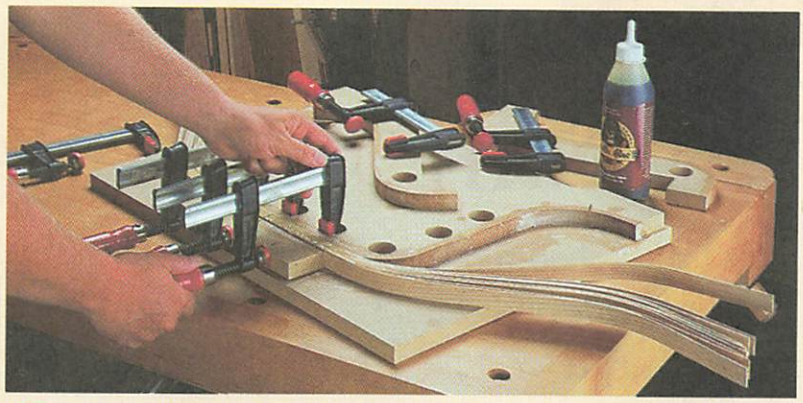

4 *To clamp up the ribs for the firewood carrier (page 14), I started at the center of the forms and worked my way out. As you're tightening the clamps, make sure the strips stay as flush as possible, see margin.*

5 *After the rib is clamped at the center, work on the outer forms on the sides. Start by clamping across the two bends on each side. Then add the other clamps, adjusting them until all the laminations are tight with no gaps.*

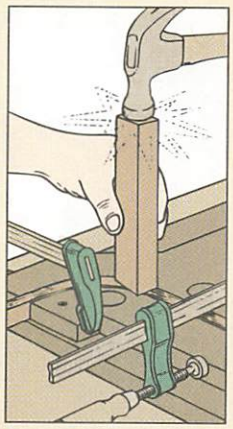

▲ *While the strips are being clamped, they tend to slide, so use a hammer and scrap block to pound them flush.*

CLEANING UP THE LAMINATIONS

At this point, the assembly isn't a pretty sight. There's dried glue caked everywhere, and the edges of the strips aren't even. So the job now is to clean up the assembly.

The trick was figuring out how to hold the assembly secure while I squared the edges. I couldn't hold it by hand very easily, and I couldn't clamp it to the bench without having to reposition the clamps.

The solution ended up being pretty simple. I set the assembly back in the form. Then I secured it by screwing the outer forms to the base, see Step 6. This really held the assembly secure and left the entire edge free. (Note: If your assembly is flush with the inner and outer forms, you can set it on thin strips to raise it slightly.)

The next step is to scrape off the excess glue. (I used a paint scraper.) Then to even out the edges, I used a sharp block plane, see Step 7.

When one edge was even, I flipped the assembly over and repeated the procedure on the opposite edge. Then I took a final step to make sure the edges were flat. I placed adhesive-backed sandpaper on my table saw and sanded the assembly. W

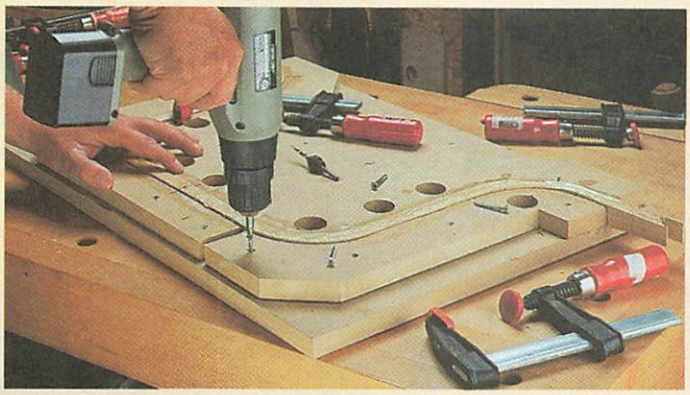

6 *With all the assemblies glued up, the excess glue can be removed and the edges made flush. To hold each assembly while doing this, I placed it in the form and screwed the outer forms to the base.*

7 *After the excess glue had been removed with a paint scraper, I evened out the edges of the assembly, using a sharp block plane. When smooth, flip the assembly over and repeat this process.*

LAMINATED COAT RACK

Start with a shop-made form and some thin strips. Then add glue and clamps. The result is a simple project that's a great place to hang your hat.

Hesitant about bending wood? Then this is the perfect project to start with. The form is easy to build; the hooks are small and quite manageable, and you don't need a wall full of clamps — six is all it takes. Plus, there's even a step-by-step article that will walk you through the bending process, see page 18.

FORM FOR BENDING HOOKS. Before beginning work on the hooks, you need to build the form for bending the hooks. In a way, the form is like a jig — it's not part of the project itself, but it's still essential to getting the project built. (I've described how to build it on page 25.)

THIN STRIPS. After I had completed the form, I began work on making the thin strips that are bent around the form. The safest way to rip thin strips is to set the fence so the strips fall to the waste side of the blade. But the problem is, you have to reset the fence with each pass, and besides being a hassle, the strips don't end up a consistent thickness either.

Instead, I ripped the piece with the thin strip between the blade and the fence. This way, the fence could be left in one position. But I did have to take some precautions to prevent kickback. First, to keep my hands away from the blade, I used a push block that rode on top of an auxiliary fence, see Fig. 1. Plus, I used a zero-clearance insert that had a built-in splitter in the back. (For more on making the fence, push block and insert, see page 27.) This splitter reduces the chance of kickback by preventing the wood from pinching the blade.

When ripping the strips, I started with 24"-long pieces that had relatively straight grain, see Fig. 1. (Note: I used 4/4 ash — 13/16" actual thickness, see Fig. 1b. I planed and sanded it to 3/4" after the strips were glued together.)

Technically, to create each 1/2"-thick hook, you'll need eight 1/16"-thick strips, see Fig. 1b. But the actual number of strips you'll use depends on whether your strips are exactly 1/16" or a little thicker or thinner. Just get as close to 1/2" as you can so the forms fit as tight as possible and you don't end up with any gaps.

PRE-BEND & GLUE STRIPS. While I was determining the thickness of the strips (refer to the bending article), even at 1/16"-thick my test piece still split as it was bent around the form. So to make the strips more pliable, I soaked them in water for an hour or so. Then I clamped them around the bending form (without glue), see Fig. 2. To do this, start with the short end of the hook, positioning the pieces flush with the end of the *outer* form. (This gives you at least 3" of waste on each end just to be safe.) Then when the short end is sandwiched between the outer and inner forms, add the other outer form.

I let the strips dry overnight. Then I ran a small bead of polyurethane glue on each and clamped them back into the form. (Note: If you plan on using yellow or white glue, it's best to let the hooks dry out longer, since the moisture in the wood will slow down the curing process.) Let the glue dry at least overnight before removing the assembly — the longer the better since the pieces are exposed on only one edge.

Once the glue has dried, you can remove it from the form and set it aside until the other hooks have been glued up. (You'll need five in all.) Be sure to wax the form after each **hook (A)** is glued up so the next one isn't glued permanently into the form.

CLEANING THE HOOKS. By now, you know that laminating wood is messy business. And at this point, it's time to clean up all the hooks. The first thing I did was to mark the ends of the hooks from the form and cut them to final length with a hand saw.

Next, I put the hook back in the form and screwed the outer form to the base to hold it tight. This way, I didn't have to hold the piece steady as I worked on its edge. (If the edge of the hook isn't above the surface of the form, simply shim it with small blocks until it is.)

I started by scraping away most of the glue with a paint scraper. Then because the laminations weren't perfectly flush, I planed the edges with a sharp block plane.

I cleaned up one edge of each hook. Then I flipped the hooks over to work on the opposite edge. But since the hooks aren't symmetrical, I had to flip the inner and outer forms as well. (This is why the inner form is simply screwed to the base, see page 25.)

Keep in mind that at this point the assemblies are flat, but they may not be an identical thickness. So to avoid having to cut each dado in the back strip a different size, I made all the hooks the same thickness.

To do this, I measured each hook to find the one that was the thinnest. Then I cut a dado in a scrap piece to hold this hook. Now getting the others to fit was just a matter of sanding or planing them until they fit the dado.

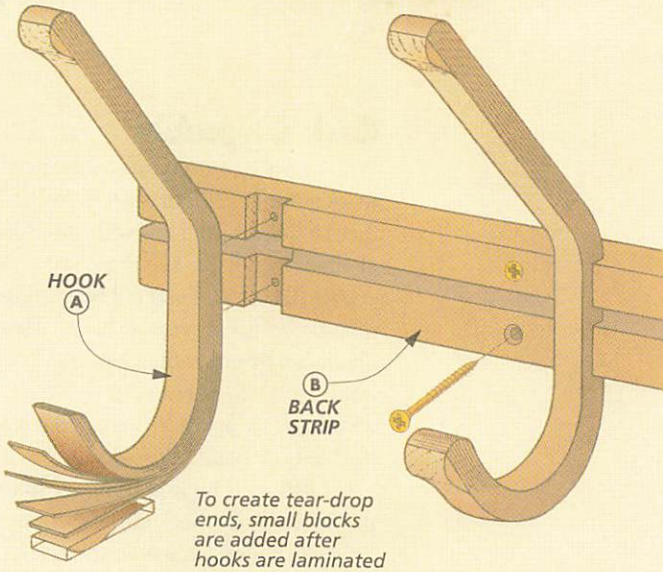

SHAPE ENDS. At this point, the hooks are about complete. All that's left is to add the tear-shaped curves at the ends. (These don't serve any practical purpose — they're decorative.)

To add the curves, it's easiest to start with square blocks. I glued small 1/4"-thick blocks to the outside faces of each, see Fig. 3. Then I drew an arc at each end, see Figs. 3a and 3b. Most of the waste can be trimmed off with a band saw or hand saw. Then you can sand to the line with a drum sander, see photo below.

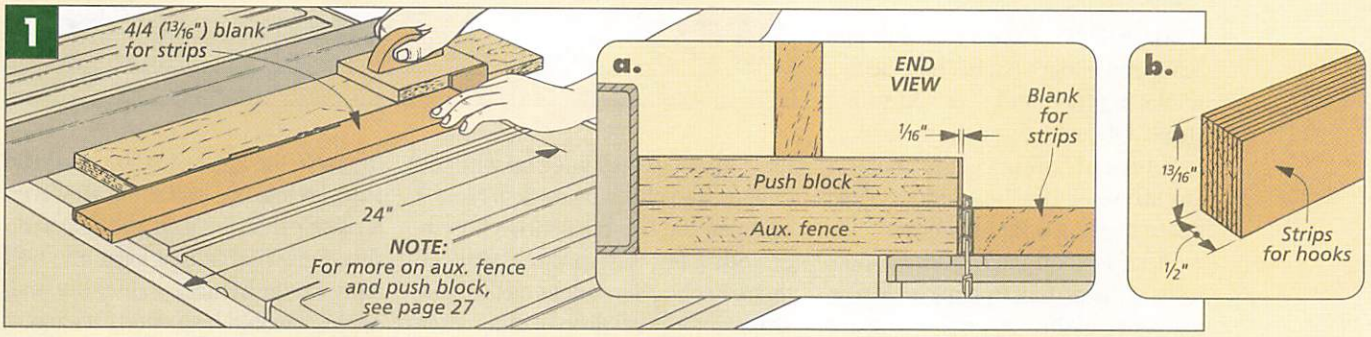

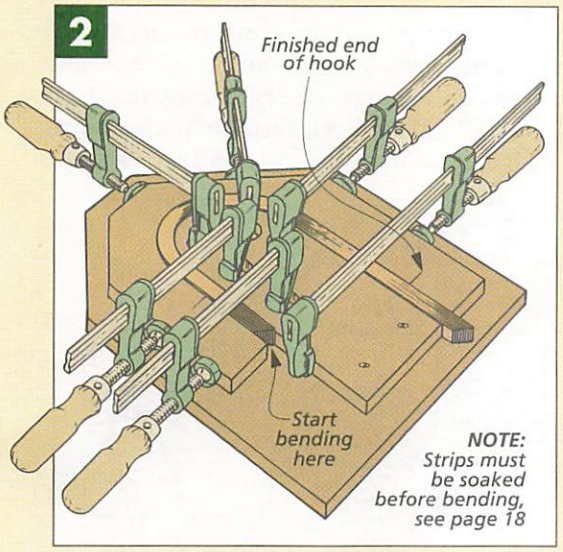

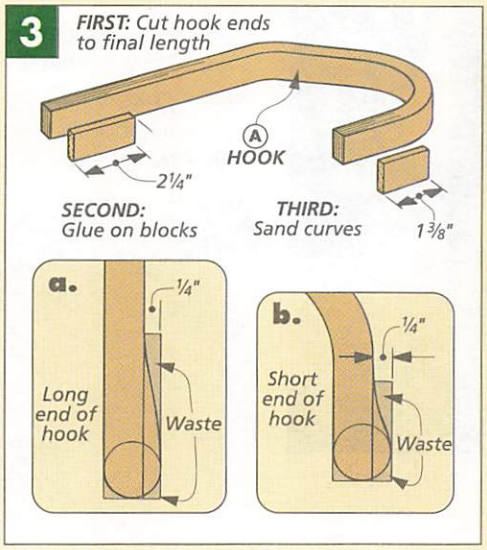

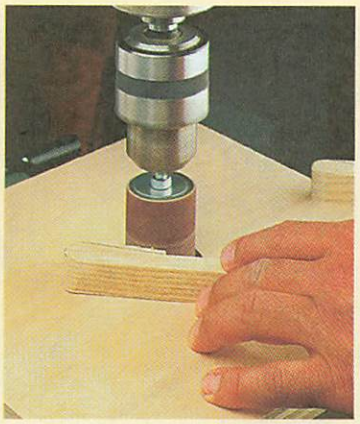

▲ *To create the tear-drop ends on the hooks, I added small blocks and laid out the curves. Then they're cut and sanded smooth.*

Rack Assembly

With all five hooks complete, the hard work's done. All that's left is to "tie" them together. I did this with two simple backing strips, see drawing.

OVERSIZE BLANK. I started by cutting a single ¾"-thick oversize blank. This blank can be cut to final length (30"), but I left it wide enough so both ⅞"-wide back strips could be ripped from it. (I left my blank 2½"-wide.)

CUT DADOES. The first thing to do to the blank for the back strips is cut the ¼"-deep dadoes that hold the hooks, see Fig. 4. The width of the dadoes is determined by the thickness of the hooks. And to keep the spacing consistent, I added an auxiliary fence to the miter gauge and used a stop block to position the blank, flipping the piece between passes, see Fig. 4.

ROUND OVER EDGES. With the dadoes cut, the next thing to do is rout a roundover on the ends of the strips. I used a ¼" round-over bit to do this, see Fig. 5a. And to prevent chipout, I backed up the cut with a push block.

Now, the two **back strips (B)** can be ripped to final width (⅞") from the blank, see Figs. 5 and 5b.

ATTACH HOOKS. Here's where things really come together. Each of the five hooks is glued and screwed to the strips. Of course, it took me a while to figure out how to get the hooks to line up evenly. But the solution turned out to be right under my nose.

First, I stood each of the hooks against the rip fence on my table saw, using one of the back strips to space them apart so they lined up with the dadoes, see photo below left. Next, I clamped the two back strips together with a few ¼" spacers between them. Each of the dadoes on the back strips got a small drop of glue. Then I set the back strips on the hooks and screwed them together.

FINISH. To finish the hooks, I stained them a golden amber color. Then I applied a few coats of an oil finish.

HANGING THE RACK. When hanging the rack, the ideal situation would be to screw into two wall studs. However, it's likely that you won't be able to do this. Screwing into at least one wall stud would be acceptable, but wall anchors would be a good idea too.

I left my screw heads exposed, but if you prefer, you can cover them with button plugs. Simply drill ⅜" counterbores in the back strips. But don't glue the plugs in place. You may want to move the coat rack later. W

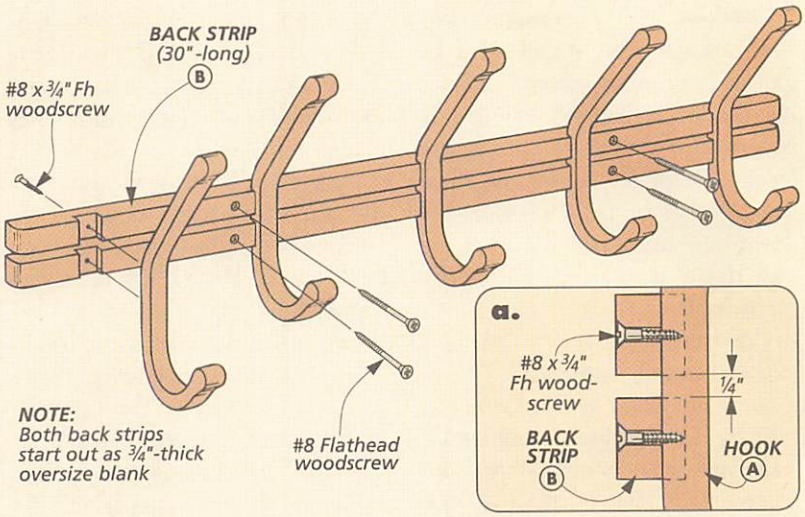

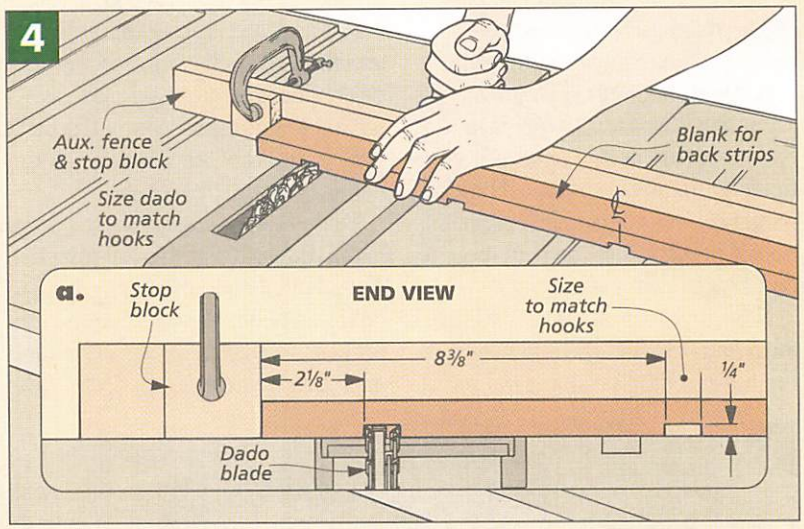

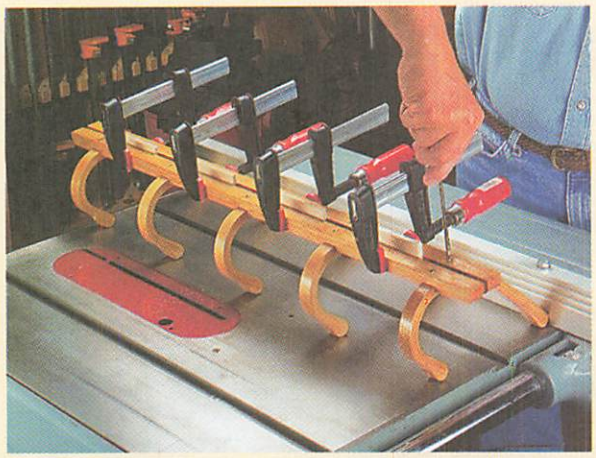

▲ *During assembly, I aligned the hooks by butting them against the rip fence on my table saw. The back strips are held parallel with spacers clamped between them.*

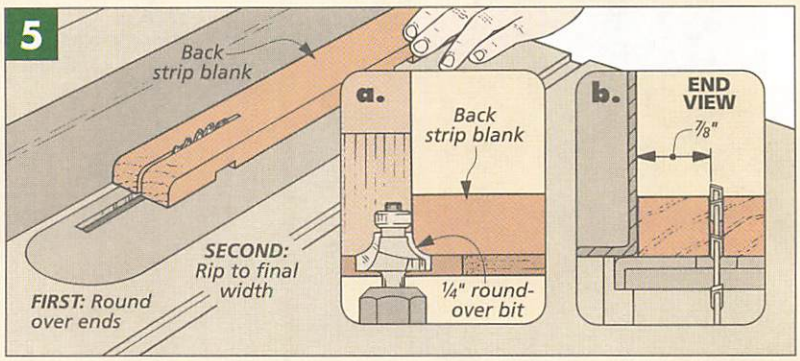

COAT RACK FORMS

Like pouring concrete, the first thing you need to do when bending wood is build the forms. There are two forms here — an inner form that the pieces are bent around and an outer form that sandwiches the pieces.

3/4"-THICK MDF. To make the form, all you need is some scrap 3/4"-thick MDF (or plywood) and a sabre saw or band saw. Usually, I make the forms at least as thick as the strips that are being bent. But the coat rack hooks here are an exception.

I used 3/4" MDF even though the strips start off 13/16". (I used 4/4 stock, which typically comes 13/16" thick.) This extra 1/16" did not create a problem (the laminations still ended up tight), and it saved me from having to laminate two pieces of MDF together to build up the forms.

To build the form, I started with a single piece of MDF cut 9 3/16" x 12 3/16", see Fig. 1. Then I laid out the curves for both the inner and outer forms. Because the final thickness of the strips will be 1/2", there's a 1/2" gap between these two layout lines that will be cut away as waste.

SHAPE FORMS. When cutting out the inner and outer forms, I stayed on the waste side of the line. Then I took the forms to the drum sander on my drill press and sanded them up to the lines. Be as careful as you can here. The better the two forms sandwich the strips, the less chance there will be for any gaps between the laminations.

Though the two forms are cut apart and sanded smooth, they both need a little work yet. On the inner form I drilled 1 1/4"-diameter holes 1/2" from the edge for clamps, see Fig. 2.

On the outer form, the first thing to do is trim two of the outside corners, see Fig. 2. These angled edges allow the clamps to apply pressure directly across the strips. Then with the corners cut, the outer form can be cut into two pieces — a short one for the short end of the hook and a longer one for the long end. This lets you work on one bend at a time.

BASE. All that's left now is to make the base, see margin drawing above right. It's cut to final size and shape, and its corners are angled like the outer forms — but for a different reason. If the base sticks out past the outer form too much, you'll skin your knuckles when tightening the clamps.

Instead of gluing the inner form to the base, I screwed it in place. This allowed me to flip it over when cleaning up the edges of the laminations.

WAX FORMS. Now before you begin bending with the forms, you need to mark the location of the ends of the hooks on the forms, see Fig. 2. And finally, apply a heavy coat of wax. This way, your laminations won't be permanently glued to the forms. W

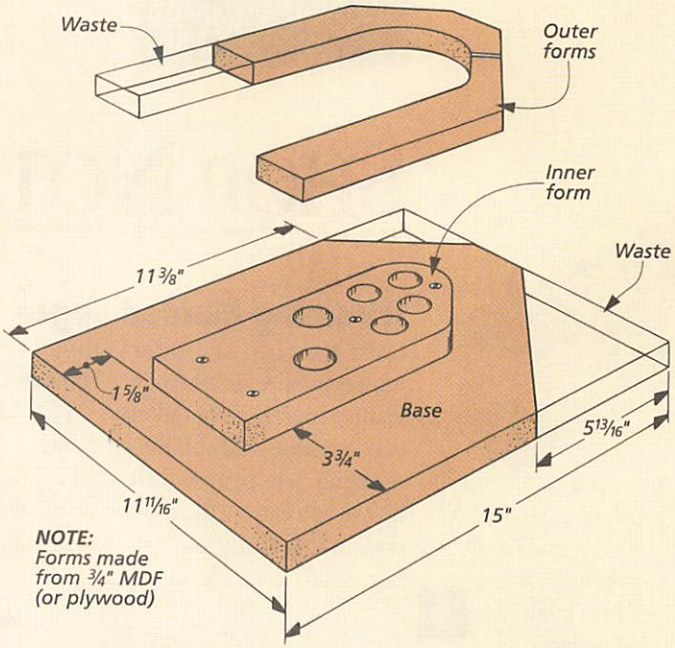

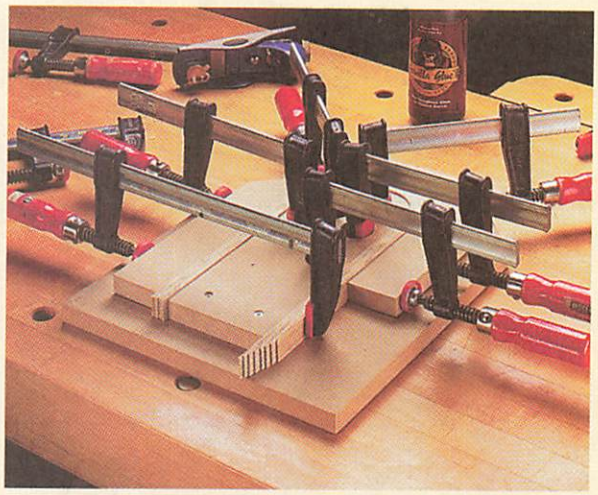

▲ *To glue up each of the hooks for this coat rack, all you need are eight 1/16"-thick strips, a simple shop-made form, six clamps — and plenty of glue.*

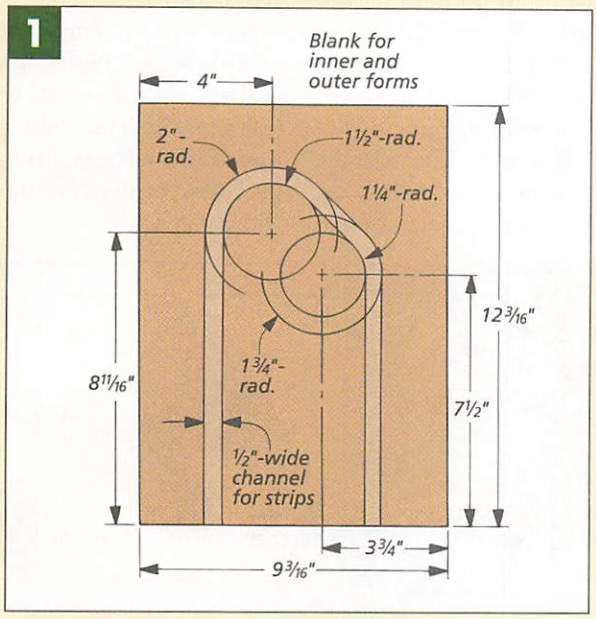

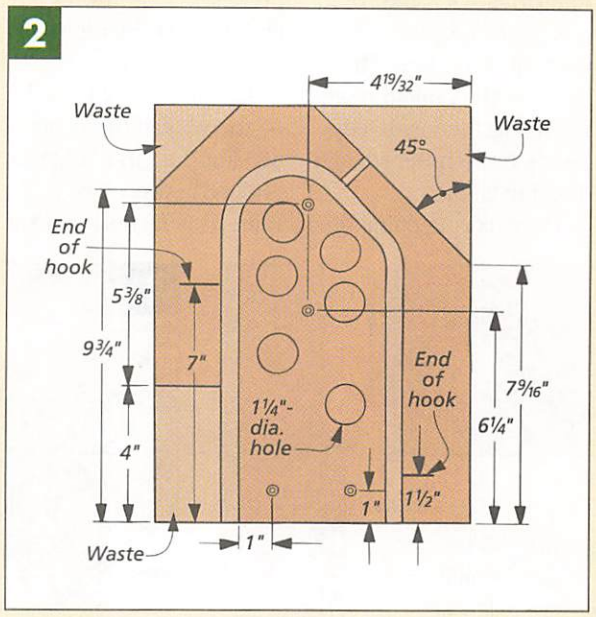

SHOP NOTES

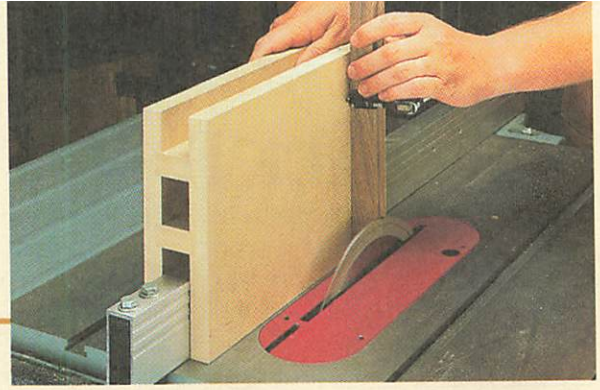

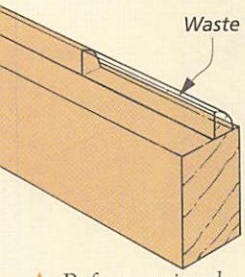

▲ *Before cutting the mortises on the clock stiles, you'll need to remove part of the built-in molding.*

Trimming Molded Edges

Both the side and door frames on the mantle clock feature mortise and tenon construction with built-in molding, see page 6. But before you can cut the mortises, part of the built-in molding will have to be removed, see margin.

I could've done this by making multiple passes with a dado blade, but this would've left score lines. So to get a clean shoulder, I used a tenon jig, standing the pieces on end, see photo above.

The tenon jig used here consists of two face pieces and two crosspieces. (I used MDF.) The crosspieces are sized so the jig slides easily along the fence without any slop, see Fig. 1. (I cut dadoes in the face pieces to make it easy to assemble the jig.) Then I added a vertical stop along the back edge to support the workpiece and keep it square to the table.

Usually, when cutting tenons, I place the face of the workpiece against the face of the jig. But to cut away the built-in molding, you'll need to set the outside *edge* of the piece against the face of the jig. And when setting the rip fence, it's a good idea to sneak up on the cut so you don't leave any saw marks on the workpiece.

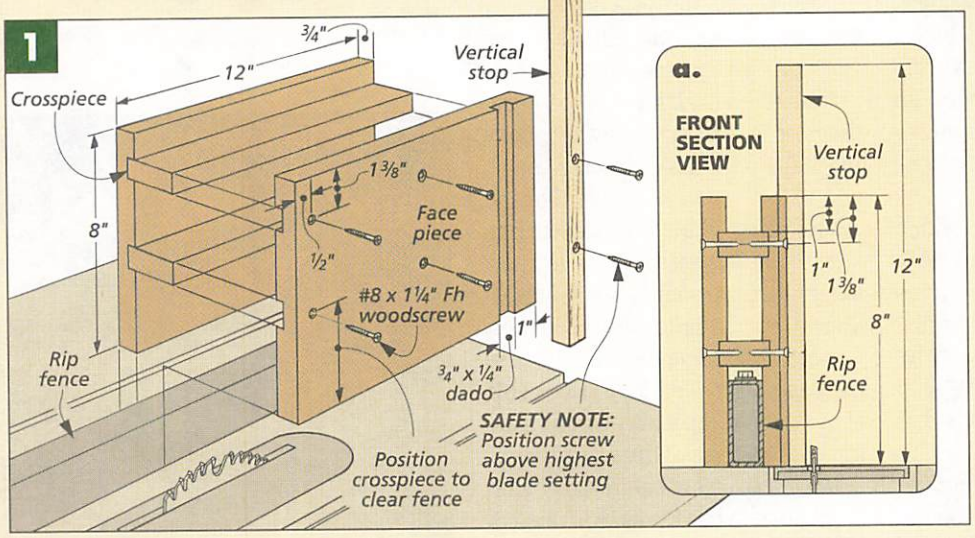

Mitering Molded Edges

Even after you've cut the mortises and tenons for the mantle clock sides (and door), these pieces still won't fit together. That's because the built-in molding along the inside edge needs to be mitered, see drawing below.

The secret to doing this is a simple, shop-made jig, see Fig. 1. It fits over the pieces and guides your chisel as you miter the ends of the molding.

The jig is easy to make — there's just three parts, see Fig. 1a. First, a spacer is glued between two guide rails. This forms a pocket for your pieces to fit into. Then the jig is mitered on one end. And about the only thing critical for the jig is that the spacer matches the thickness of the pieces you're trimming.

To use the jig to miter the molded edges, simply set it over a frame piece and clamp it in place, see Fig. 1. Then secure the jig in your bench vise.

Now you can pare the molding with a chisel. The goal is for the rails and stiles to fit together tight. And it's a good idea to sneak up on the cut so you don't end up with a gap.

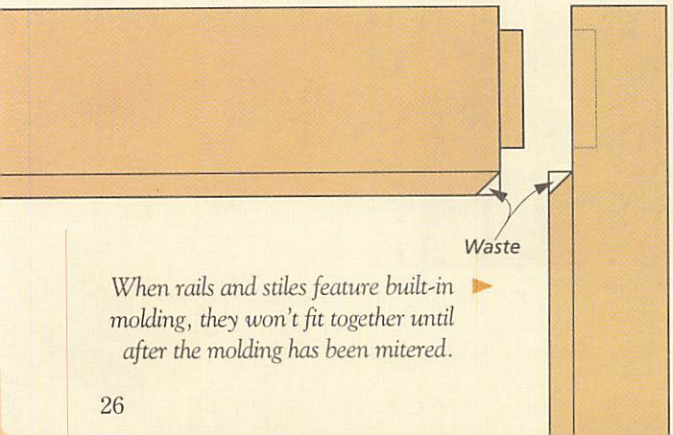

When rails and stiles feature built-in molding, they won't fit together until after the molding has been mitered. ►

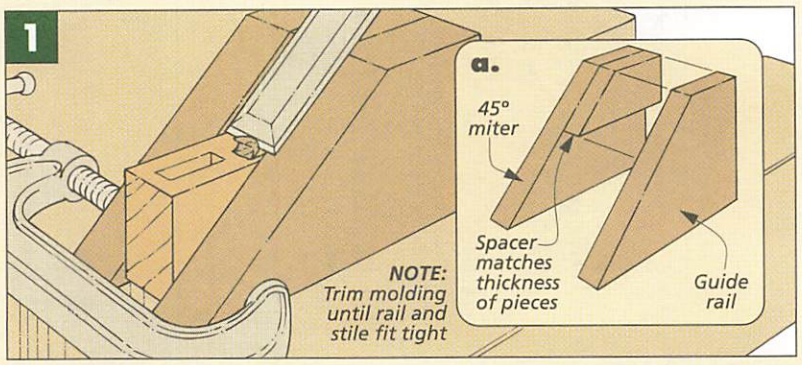

Ripping Thin Strips

When ripping a single thin strip, I'll set the rip fence so the strip ends up on the waste side of the blade. But when I need a bunch of thin strips, as I did with the firewood carrier and coat rack, I cut the strips between the rip fence and the blade. To do this safely, I use an insert with a splitter (see box below) plus a simple auxiliary fence and push block that keeps my hand out of the way, see Fig. 1.

The trick is that the push block and fence are cut from the same piece so they're the same width. And to move the piece through the blade, a small "heel" is glued to the edge of the block near the back, see Fig. 2. (The heel started out as 1/8"-thick hardboard and is trimmed to final thickness after the fence is set.) Finally, I added a handle to make the block easy to push.

To position the auxiliary fence, I first set the rip fence so there would be 1/16" between the blade and the auxiliary fence, see Fig. 1a. Then, I carpet taped the auxiliary fence face down to the table, see Fig. 1.

To rip the strips, start by feeding the stock by hand. Then when you're near the end of the piece, set the stop block in place and complete the cut.

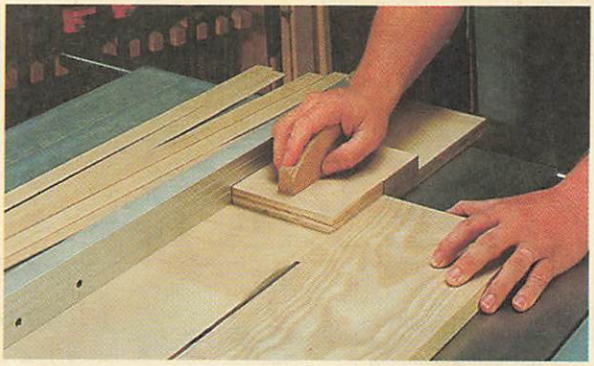

▲ *This short, wide auxiliary fence and stop block combination keeps your hands away from blade while ripping thin strips from both long and short blanks.*

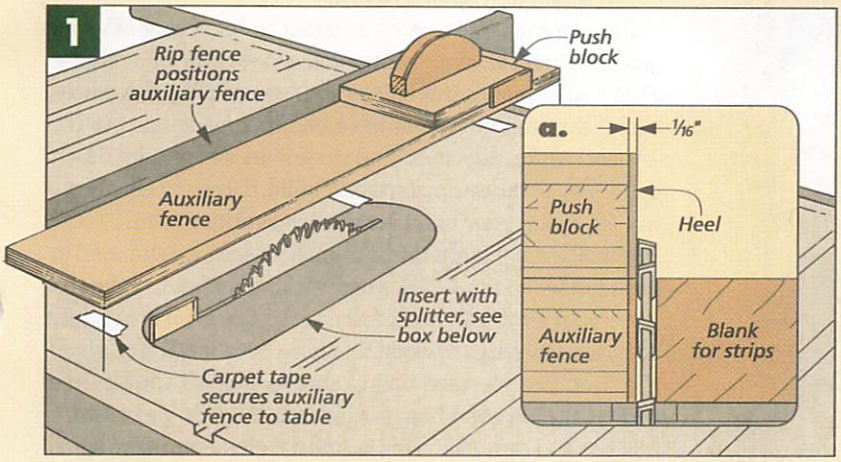

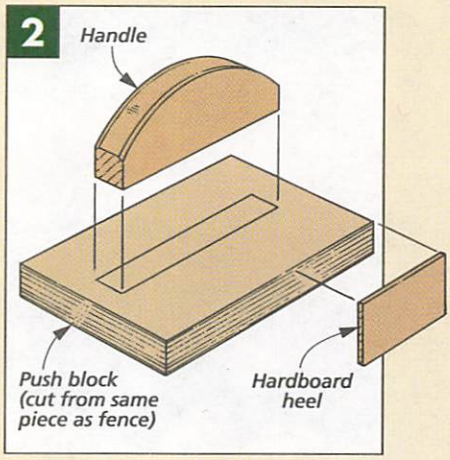

ZERO-CLEARANCE INSERT WITH SPLITTER

When I rip thin strips, I like to use a shop-made table saw insert that has a splitter. It helps to keep the wood from binding on the back of the blade. (Mine is a zero-clearance insert.)

To make the new insert, you'll need a blank that matches the *thickness* of your old insert. (I used 1/2" MDF. It was a little thin, but later I shimmed it with tape until it was flush with the top of the saw.) Next, trace the outline of the original insert onto the blank and rough cut it to within 1/16" of the pencil line, see Fig. 1.

To trim the blank to the same shape as the original insert, I first carpet-taped them together. Then I mounted a flush trim bit in the router table and, with the bearing riding along the original insert, trimmed the new one to shape, see Fig. 1a.

To rip the blade slot in the new insert, carefully align the fence with the edge of the original insert, see Fig. 2. Then rip the slot, turning off the saw when you're 3" from the end.

To make the splitter, rip a piece to the exact thickness of the kerf, 1" high and 3" long, see Fig. 3. Sand the end closest to the blade to a point and glue the splitter into the kerf.

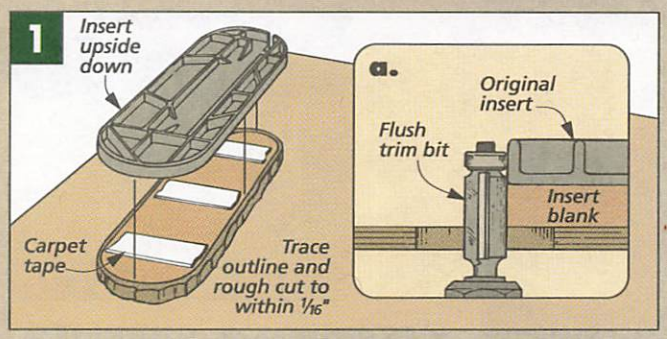

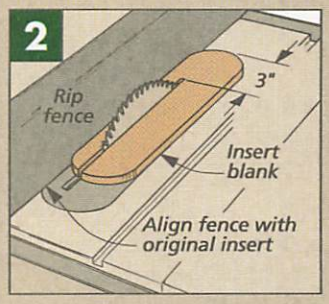

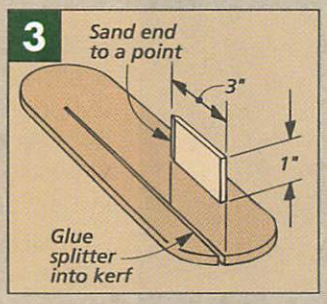

SPICE RACK

How do you "spice" up a practical project like this rack? Just add a few hand-cut lap dovetails and some graceful curves.

One of the reasons I enjoy woodworking is it offers so many challenges. Whether it's trying out a different technique or mastering a new tool, there's always fresh ground to break and new skills to learn.

But sometimes, I'm a bit hesitant to "experiment" on a project when I've already invested a lot of time and money. That's what makes this spice rack so appealing. It features a joint that you might not have had the opportunity to try — hand-cut lap dovetails. And since it doesn't require much in the way of time or materials to build, it's an excellent project for trying your hand at this woodworking joint.

DESIGN. Even though this is a small project, we still tried to desing it with some solid woodworking features. Take the joinery for example. Most spice racks I've seen are simply a few narrow strips of wood that have been stapled or glued together. But we used dado joints to support the shelves and let the back and front rails into the side pieces with notches and dovetails. This ties all the elements of the spice rack together to create a strong frame.

SIDES

This spice rack is really just two side pieces that are joined by three shelves and two sets of rails — one at the front and one at the back. Since most of the joints are cut on the side pieces, I decided to make them first.

THIN STOCK. The first challenge in making the sides is in getting the stock down to the correct thickness. In order to keep the spice rack from becoming too heavy when loaded up with spice jars, I used 3/8"-thick stock for the sides and

MATERIALS & SUPPLIES

A	Sides (2)	3/8 x 2½ - 16¾
B	Shelves (3)	¼ x 2½ - 11½
C	Upper Back Rail (1)	¼ x 3¼ - 12
D	Lower Back Rail (1)	¼ x 2¼ - 12
E	Middle Bk. Rails (2)	¼ x 1 - 12
F	Front Rails (3)	¼ x 1 - 12

- (3) Miniature Birch Shaker Pegs
- (2) #8 x 2" Fh Brass Woodscrews

CUTTING DIAGRAM

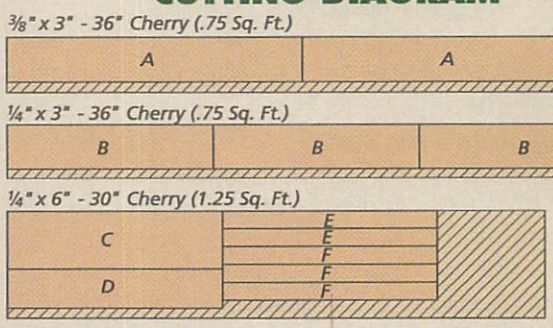

¼"-thick stock for all the other pieces.

You may not be able to find thin stock at your lumberyard. If not, you'll have to make your own out of ¾"-thick stock. One way to do this is with a surface planer. But this is a bit wasteful. So instead, I created the thin stock I needed for this project by resawing the boards. (For more on this technique, see the article on page 34.)

After thicknessing the stock, you can cut the two **sides (A)** to width and length. Then you can start work on the joinery. First, you'll need to cut a series of three dadoes on each side for the shelves, see Fig. 1.

There are two things to watch for when cutting dadoes. First, you want all the dadoes to be the same width. The best way to ensure this is to use a ¼" dado blade to cut the dadoes.

Next, you want to make sure that the dadoes are positioned exactly the same on each side piece so they will line up when the spice rack is assembled. To do this, I used my rip fence as a stop block, see Fig. 1. But don't worry — since you aren't cutting all the way through the piece, there isn't a danger of it kicking back.

NOTCHES. Once the dadoes are cut, the next step is to make the notches along the back edge of each side piece for the back rails, see drawing above. I made these notches by making multiple passes with a dado blade, see Fig. 2. To set the height of the dado blade, make some test cuts in a scrap piece of wood. Then to position the notches, use the fence as a stop again, just like you did with the shelf dadoes. And to make sure everything lines up at assembly time, I cut the notches in both sides at once, see Fig. 2.

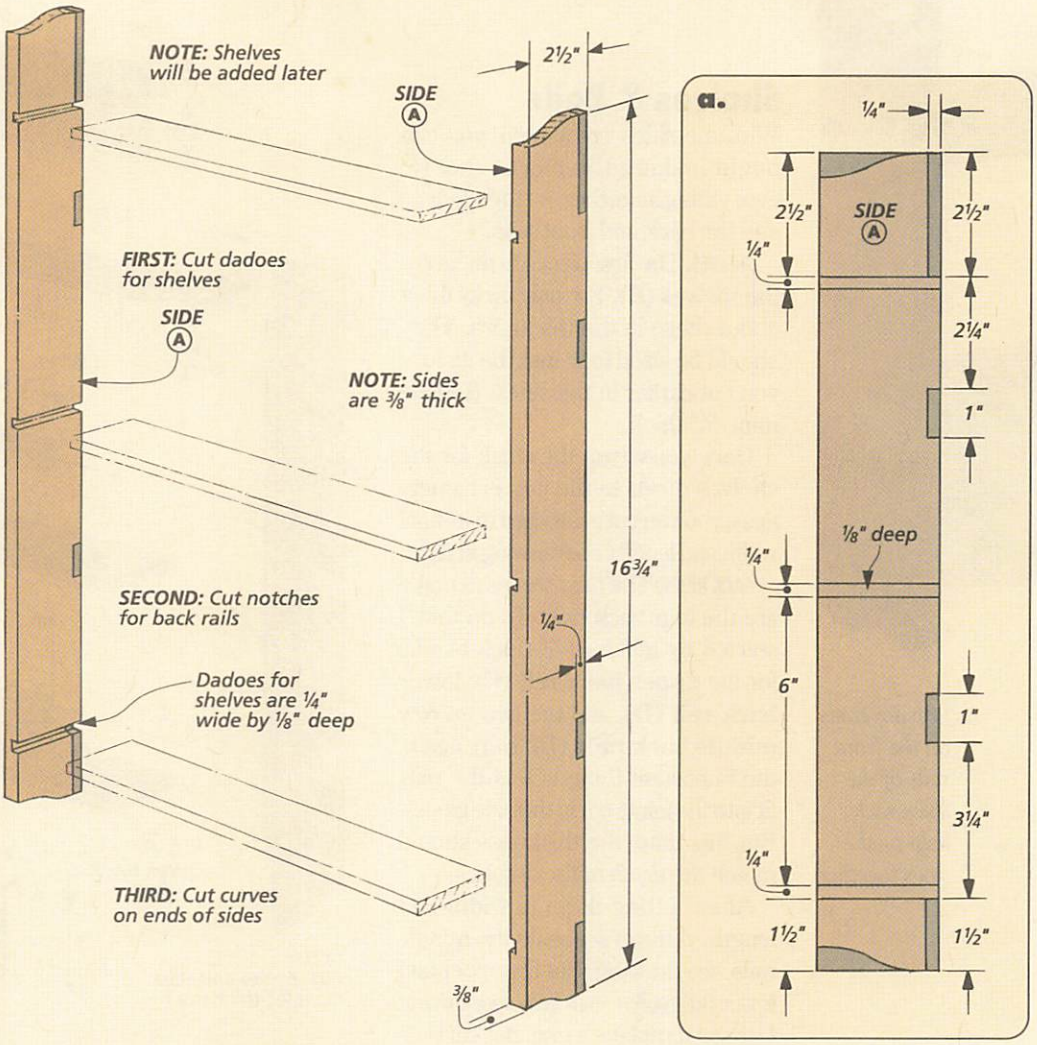

The only joints left to make on the sides are the dovetail sockets for the front rails. But since these have to be cut to match the dovetails on the rails, I waited to cut these. For now, you can simply finish up the sides by laying out the curve at the top and bottom of each piece, see pattern at right.

This is simply a matter of drawing the curves on the workpieces. Then each curve can be cut on a band saw or sabre saw and sanded smooth with a drum sander.

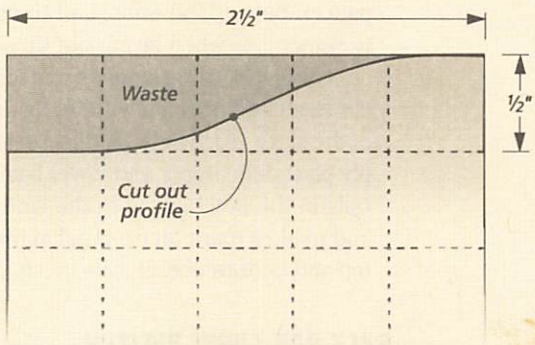

SIDE CURVE PATTERN

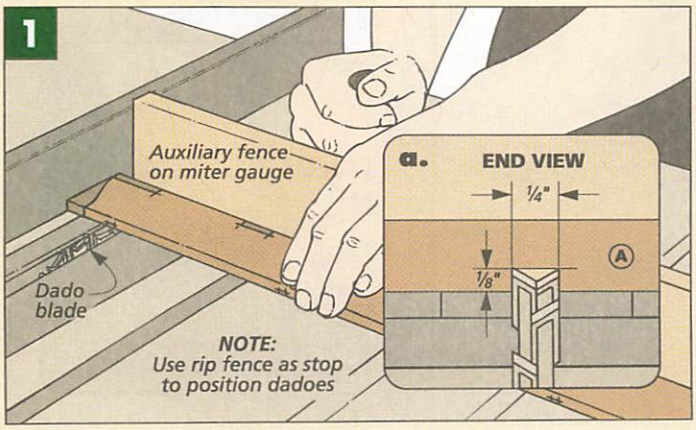

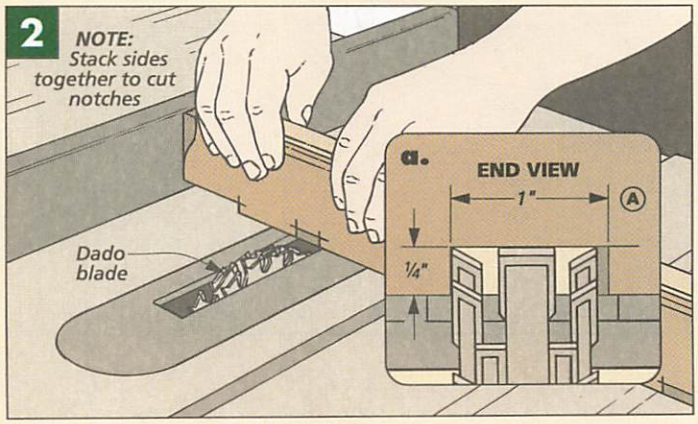

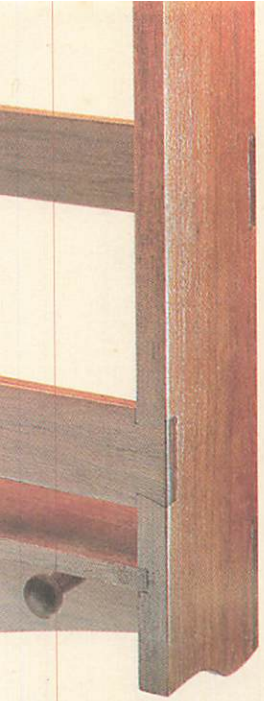

▲ *Lap dovetails on the front rails of the spice rack help tie the sides together.*

Shelves & Rails

With the sides completed, you can begin making the pieces that tie everything together — the shelves and the back and front rails.

SHELVES. The first pieces to make are the **shelves (B).** The only tricky thing about these is the thickness. They should be sized to fit into the dadoes you cut earlier in the sides. (I made mine ¼" thick.)

Once you've got the stock for the shelves down to the correct thickness, you can cut each shelf to its final width and length, see drawing at right.

BACK RAILS. The next pieces to make are the four back rails. To do this, I started by making ¼"-thick blanks for the **upper back rail (C), lower back rail (D),** and the two narrow **middle back rails (E).** Here again, the important thing is that the rails fit into the joints cut in the side pieces. But this time, the thickness should match the *depth* of the notches.

After cutting them to width and length, you can set aside the middle rails, see drawing. But the upper and lower rails still need a little more work. Using a template, a graceful curve is laid out on each piece, see Fig. 3 and pattern below. The important thing to remember when laying out these curves is that the endpoints of each curve should be flush with the ends of the sides (A). To check this, I simply placed the upper and lower back rails in the notches cut in the sides and made a mark on each rail at the top and bottom of each side piece.

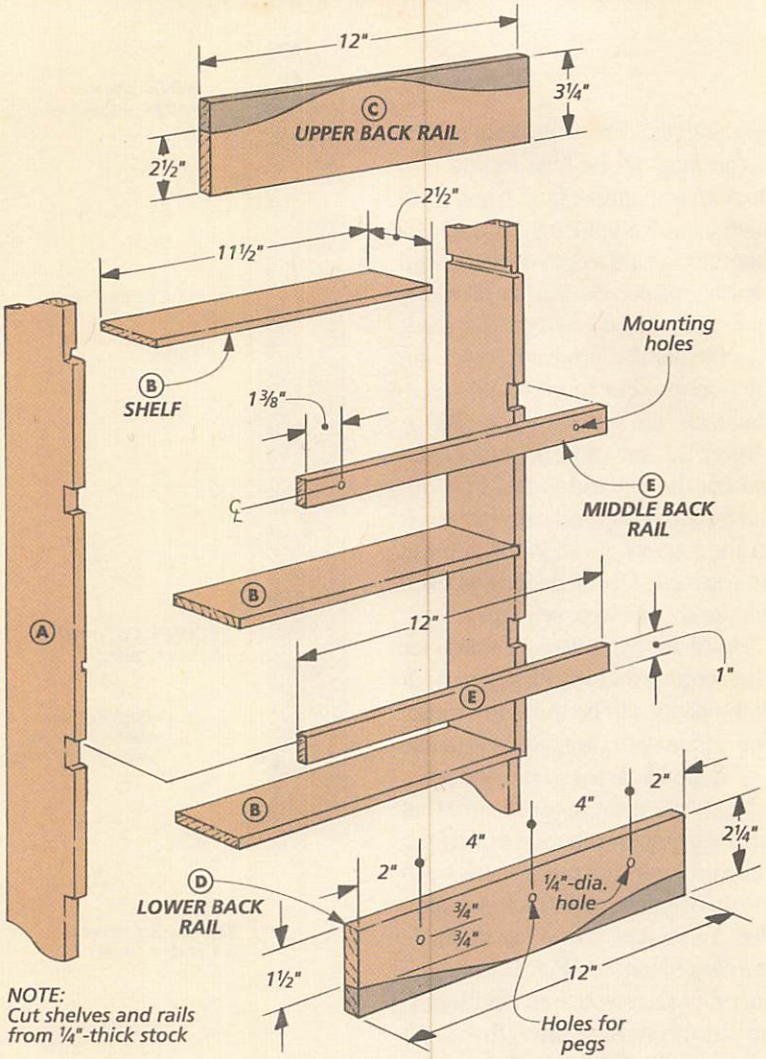

After laying out the curves, they can be cut and sanded smooth, just as you did with the side pieces. Then to finish off the lower back rail, lay out and drill three ¼"-dia. holes for the pegs that will be added later.

FRONT RAILS. With the back rails complete, all that remains are the three **front rails (F).** These rails are just three ¼"-thick blanks cut to width and length (1" x 12"). Once you have the rails cut to size, you can start making the lap dovetail joints.

LAP DOVETAILS. One of the trickiest things about making and fitting dovetail joints is getting the spacing of each row of "pins" to line up with the spacing of each row of "tails." Fortunately, you don't have to worry about spacing with this project.

BACK RAIL CURVE PATTERN

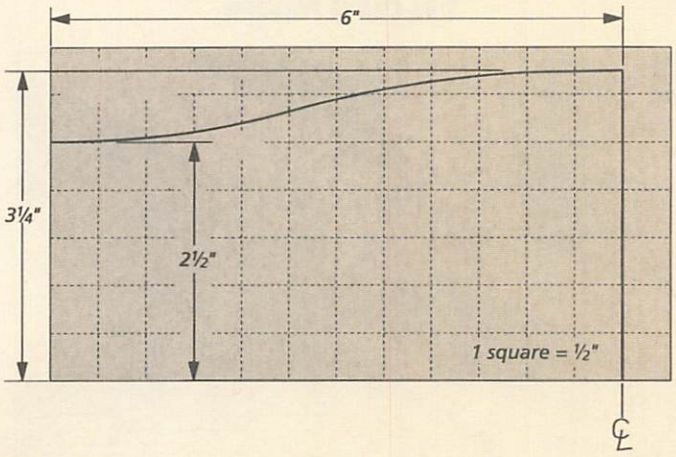

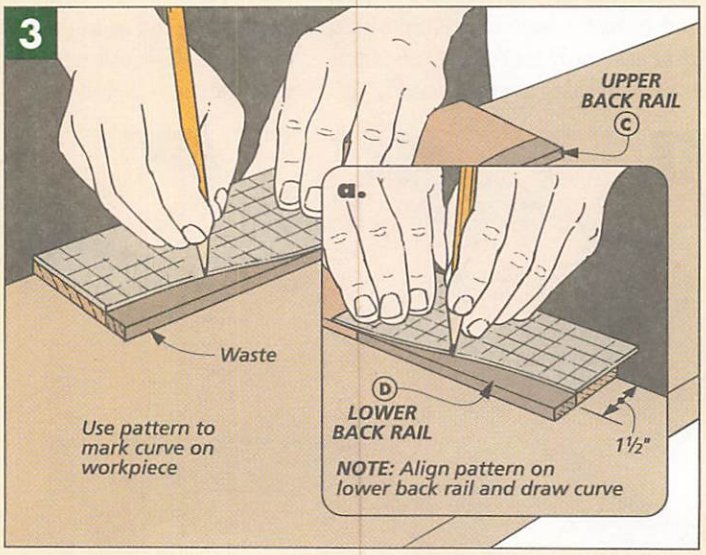

There's only one dovetail on the end of each rail. So each dovetail fits into its own "socket" cut in the edge of the side pieces, see Fig. 4.

Although you don't have to worry about spacing, you still need to be concerned with the fit of the dovetails — particularly if you're cutting them by hand. Since you'll be individually fitting each dovetail to its own socket, you need a way to keep the tails and sockets organized. I did this by lettering the ends of all the rails and the location of the sockets before starting to make any cuts, see Fig. 4.

When it came to cutting the joints, I started by laying out and cutting all the tails first, see Fig. 4a. Then I used the finished tails to lay out the sockets on the edges of the sides. I cut away most of the waste from the sockets with a saw and then trimmed the ends with a chisel until the dovetail fit snug. (For step-by-step instructions on making hand-cut lap dovetails, see page 32.)

ASSEMBLY. When all the dovetail joints are cut and fitted, you can dry assemble the pieces to see how well the entire spice rack fits together. When you're satisfied with the fit, the rack can be glued up.

Because of all the pieces involved, gluing up the spice rack can make you feel like a juggler spinning plates. So it's a lot easier if you work out a procedure *before* you start applying any glue. I started by laying out my clamps and placing a couple of support boards on top of the clamps, see drawing. These boards help to hold the back rails in place while the glue sets up.

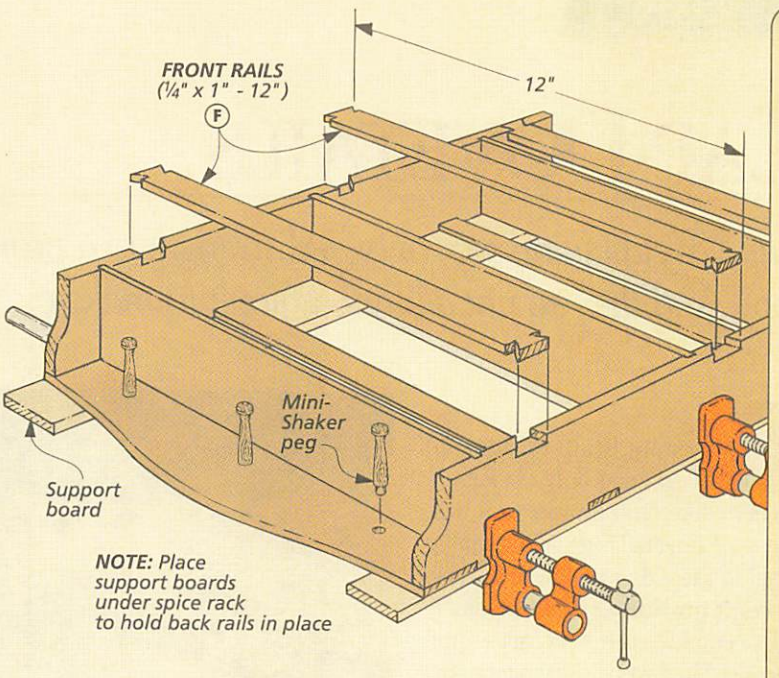

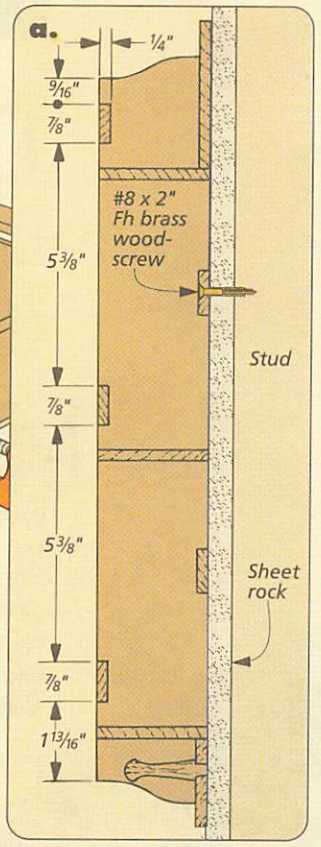

Since it's difficult to sand or remove any glue from the spice rack after it dries, try to avoid a lot of squeeze-out by using a sparing amount of glue. I glued the back rails in place first, then the shelves and finally the front rails.

SHAKER PEGS. All that's left to add to complete the spice rack are the miniature Shaker pegs. I ran into a small problem here. The only pegs I could find in this size were made out of birch. So in order for the pegs to match the rest of the rack, I stained them with a cherry stain. After the stain had dried, I glued them into the holes in the lower back rail. Then I wiped on three coats of an oil finish.

MOUNTING THE SPICE RACK. There's not much to mounting the spice rack — it's simply screwed to the wall through one of the back rails, see detail 'a' and photo below. I positioned the screw holes so they would be hidden by the spice bottles. (I located my holes 1" from the inside face of the side pieces.)

One other thing. Since the spice rack is only 12" wide and most wall studs are placed 16" apart, it's a good idea to use wall anchors. Or at least make sure that one of the mounting screws is driven into a stud.

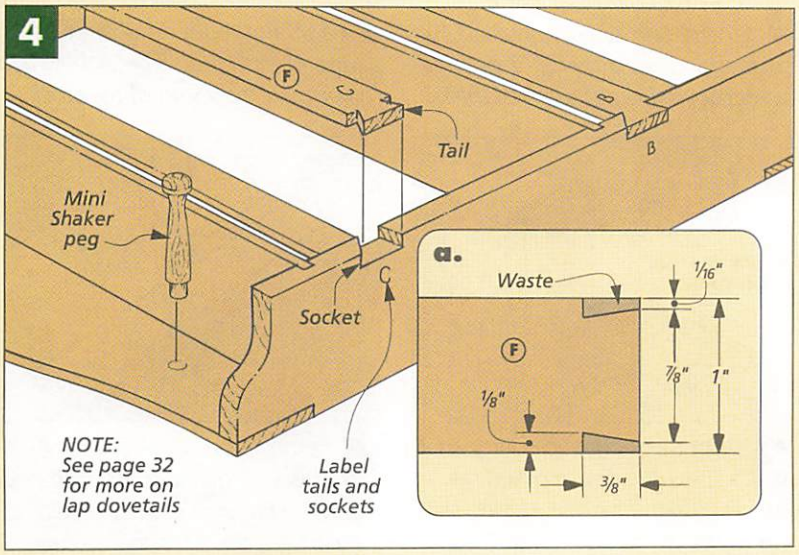

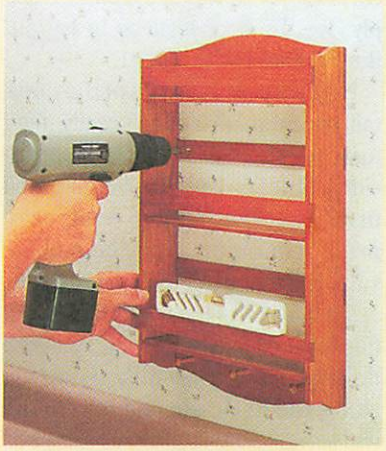

▲ *Using a level to position the spice rack, secure it to the wall with a couple of brass woodscrews.*

LAP DOVETAILS

Lap dovetail joints not only add strength to a project, they look great, too. And they're not all that difficult to make once you know how.

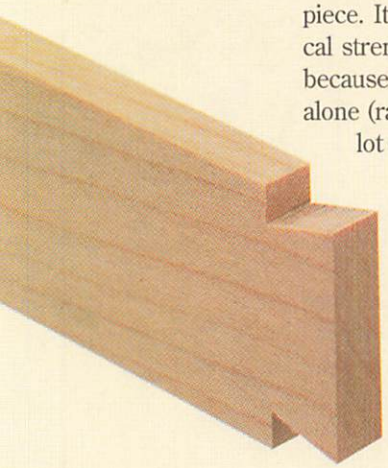

Most people think of dovetail joints as good only for joining corners, like on a drawer or a box. But a *lap* dovetail is great for joining a rail to the side or edge of a workpiece. It provides a lot of mechanical strength *and* it looks nice. And because lap dovetails are often used alone (rather than in rows) they're a lot easier to make. In fact, even though you can make lap dovetails on a router table (see box on opposite page), it's often just as quick to cut them by hand.

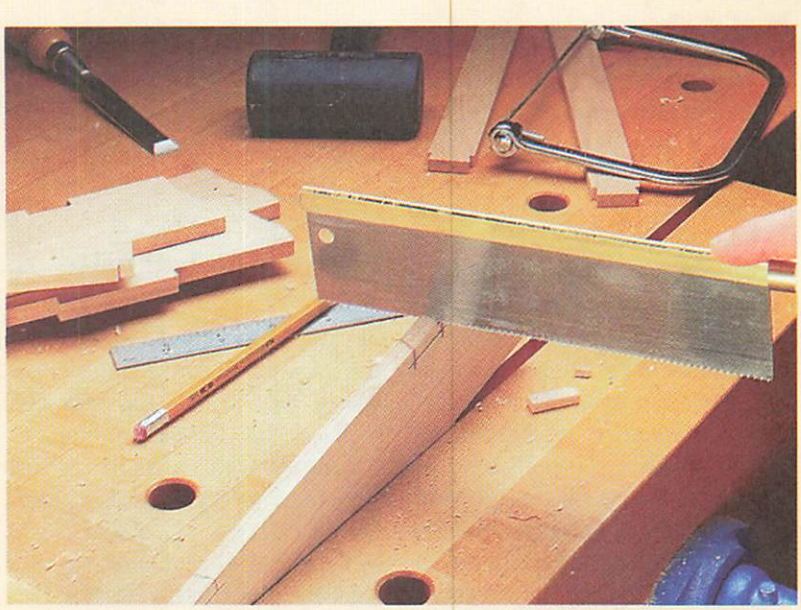

TAILS

Since the tails are the most visible part of the joint, I start with them first and then cut the second part of the joint (the socket) to fit.

To lay out each joint, I establish the baseline, or bottom, of each tail first. In some instances, (like the spice rack on page 28) the tail laps the entire edge (or width) of the socket piece. If this is the case, I simply use the socket piece to lay out the baseline, as in Step 1.

Next I mark the sides of the dovetail, see Step 2. You don't really need to worry about the exact angle of the sides of the tail, I just try to create a tail that is visually appealing. But if you're making more than one joint, make sure to lay them all out consistently.

To make the cuts, I like to use a fine-toothed back saw (or a Japanese dovetail saw). Carefully cut down along the lines, staying just to the waste side of each layout line, see Step 3. In addition to following the line, check to see that you are holding the saw perpendicular to the *face*

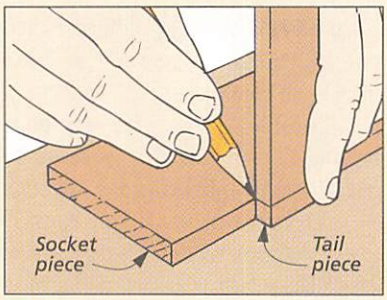

1 *Start by laying out the baseline of the tail, either by using the socket piece as a guide or by measuring down from the end of the tail.*

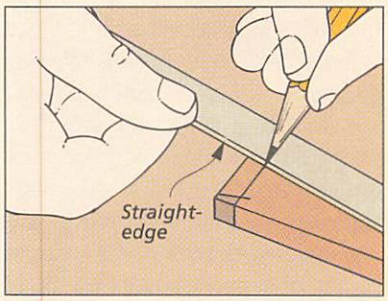

2 *Lay out the sides of the tail with a straightedge or sliding bevel gauge. The tail should be slightly narrower than the width of the stock.*

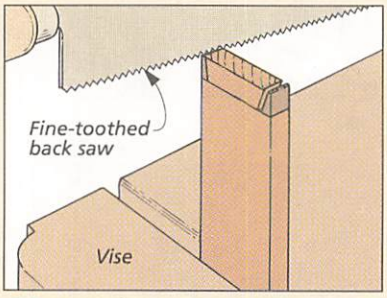

3 *With the workpiece clamped in a vise, use a fine-toothed saw to cut down along the layout lines, staying to the waste side of the lines.*

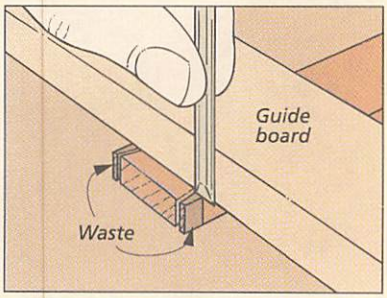

4 *Remove the waste with a sharp chisel. A guide board clamped along the baseline of the tail helps to support the chisel for square cuts.*

of the workpiece as well.

After making the cuts, the waste can be cut off with a saw or chopped out with a chisel. The nice thing about using a chisel is that you can clamp a scrap board along the baseline of the workpiece to serve as a guide, see Step 4. This will help keep the shoulders of the tail aligned.

SOCKETS

With a nicely-shaped tail in hand, you can start on the socket. The goal here is to get a close fit without any gaps. To do this, it's necessary to lay out each socket to match a specific dovetail, see Step 5. And in order to keep the tails and sockets organized, I like to letter the pieces as I go along.

With the outline of the tail scribed on the socket piece, transfer the layout lines down both sides of the workpiece. Then mark the depth of the socket to match the thickness of the tail, see Step 6.

The next step is to remove the waste from the socket. Start by making a cut at each end of the socket, again staying to the waste side of the layout lines, see Step 7. Then with a coping saw, make a cut from one end of the socket to the other, just above the bottom layout line, see Step 8.

With most of the waste removed, the only thing left to do is trim up the bottom and sides of the socket to fit the dovetail, see Step 9. The trick here is to have a sharp chisel and a steady hand. Just remove the waste in thin slivers, testing the fit of the tail as you go along, see Step 10. W

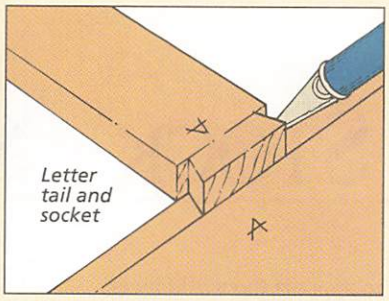

5 *Use the tail to lay out the socket. An X-Acto knife makes a nice, sharp line and also severs the wood fibers to ensure a clean shoulder.*

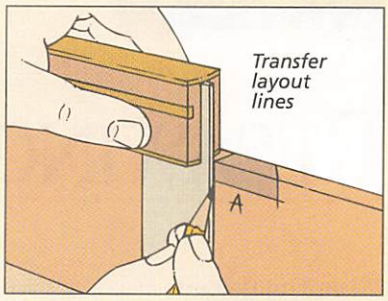

6 *Transfer the layout lines down both faces of the workpiece. Then mark the bottom of the socket to equal the thickness of the tail.*

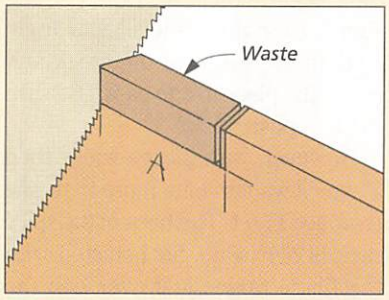

7 *Using a fine-toothed saw, make the end cuts, again staying to the waste side of the layout lines. Cut all the way down to the baseline.*

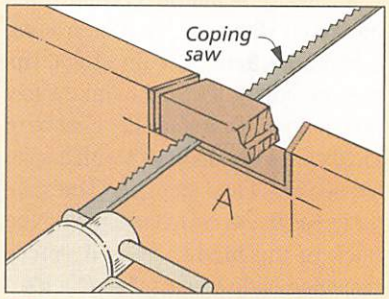

8 *A coping saw allows you to quickly remove the bulk of the socket waste. If you prefer, the waste can also be chiseled out.*

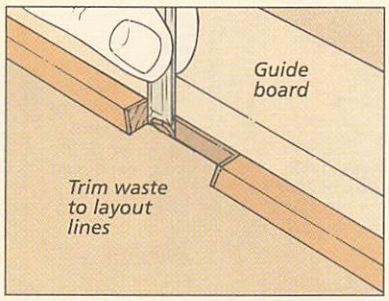

9 *With the waste removed, pare the ends and the bottom of the socket flush with the layout lines. A scrap of wood helps guide the chisel.*

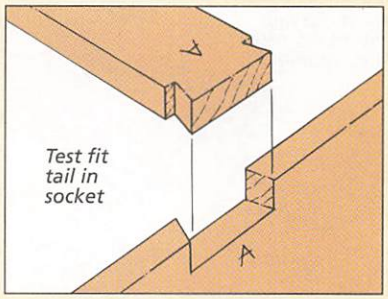

10 *Check the fit of the socket with the tail. If the joint is too tight, pare away a little material from the socket only, not the tail.*

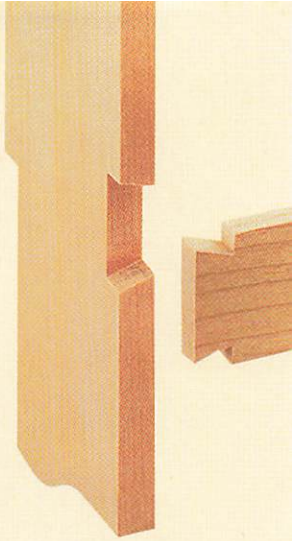

▲ *The tail should slide into the socket with light pressure and without gaps.*

LAP DOVETAILS ON THE ROUTER TABLE

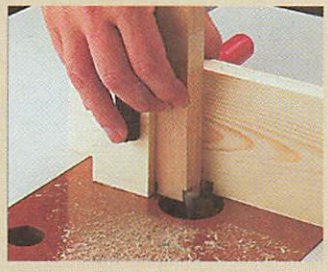

***Rout Tails**. Using a dovetail bit, rout the tails in two passes. A miter gauge fence and stop block support the workpieces.*

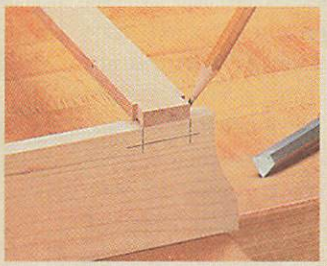

***Lay Out Sockets**. Using a tail as a template, lay out the sockets. Transfer the lines down the face of the workpiece.*

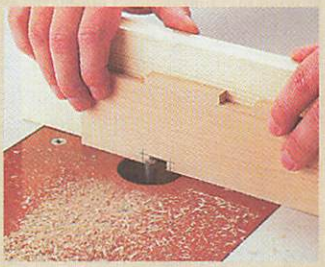

***Remove Waste**. Most of the socket waste can be removed on a router table (with a straight bit) or on a table saw.*

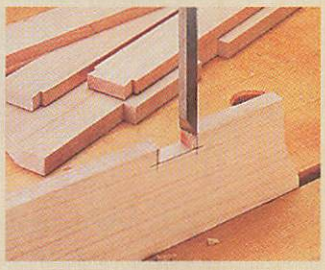

***Trim Ends**. The ends of the socket can be trimmed off with a sharp chisel. Test the fit with one of the tails.*

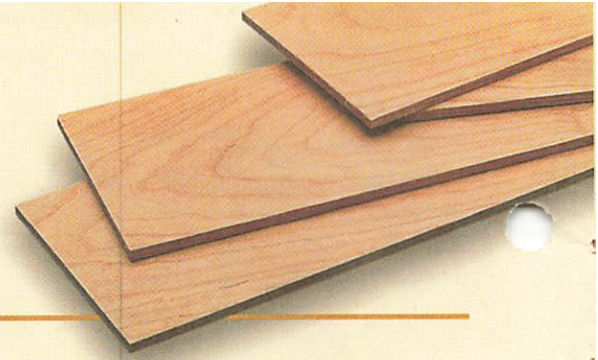

RESAWING STOCK

When it came time to make the spice rack on page 28, I needed a few pieces of thin stock — 3/8" and 1/4"-thick. So I decided to resaw some 3/4"-thick stock to size using my table saw.

Resawing is simply cutting thick boards into thinner ones. When doing this on the table saw (in effect, ripping on edge), it's best to take a few precautions. To reduce the chance of kickback, I use an insert with a splitter, see Fig. 1 and page 27. (The splitter keeps the wood from pinching the back of the blade.) Plus if you're resawing wide stock (4" to 6"), it's a good idea to add a tall auxiliary fence to support the workpieces.

Resawing a piece with a table saw may take one pass or several — it all depends on how wide the stock is. If the piece is less than 2", like most of the pieces on the spice rack, you can simply raise the blade slightly higher than the width of the stock and resaw the piece in one pass. (Be sure to use a push stick.)

However, with pieces wider than 2", you'll want to take more than one pass, see Fig. 1. The back of the spice rack is 3 1/4" wide. So I started with the blade raised just over half the width of the piece (1 3/4") and made two passes at this setting, flipping the piece over between passes. (Keep the same face against the rip fence.)

Note: If your piece is wider than 4", it's a good idea to make multiple passes, raising the blade in 1" increments.

I typically set the rip fence so I end up with workpieces that are slightly thicker than what I need. That's because when resawing you can end up with saw marks and burn marks that will need to be cleaned up. (I also start with extra-long blanks and trim them to finished length later.)

For narrower pieces, you can clean up the faces by sanding them with a drum sander, see box below.

But you can also clean up the pieces on the table saw with a combination blade. (This time, use a featherboard to hold them against the fence.)

Raise the blade 1/16" higher than the midpoint of each piece so that the finish cuts can be completed in two passes. And when making these cuts, push the piece through with steady pressure and without hesitating. This will help prevent burning and leave a smoother finish on the face.

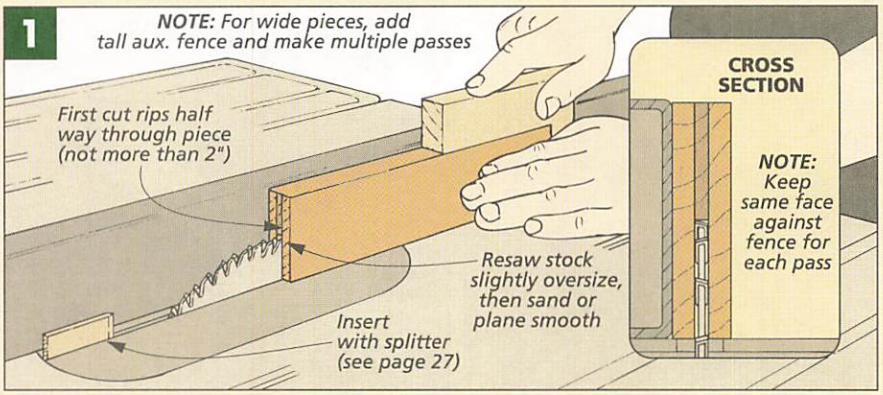

THICKNESS SANDING ON THE DRILL PRESS

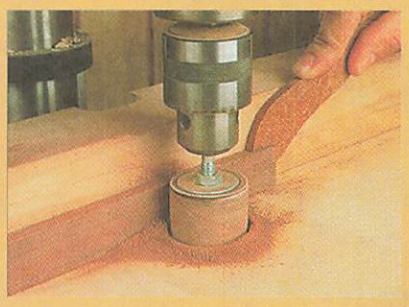

After resawing a workpiece in two, the face of each needs to be cleaned up. To do this, you can use a drill press with a fence and a large drum sander, see photo above. (Set the speed to no more than 2,000 RPM's.)

To ensure the drum makes contact with the full width of the strip, it has to be lowered slightly below the surface of the table. This requires an auxiliary table with a hole cut in it that's slightly larger than the sanding drum.

To sand each piece, feed it between the drum and the fence from right to left (against the drum's rotation), see drawing at right. If you feed it from left to right, the spinning drum will grab the piece, pull it through, and shoot it off the table. And to be safe, use a push stick. (A spinning drum can take off skin as well as wood.)

For the smoothest results when using this technique, maintain a steady feed rate and make light passes (about the thickness of a playing card). Also, to prevent the wood from burning, it's a good idea to periodically clean the drum with a rubber belt cleaner.

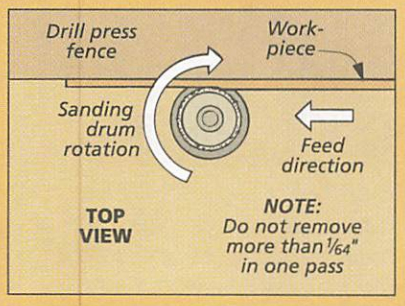

SOURCES

Woodsmith Project Supplies is offering hardware kits and shop drawings for some of the projects featured in this issue. Similar supplies for these projects are also available at local woodworking stores or the mail order sources listed at right.

MANTLE CLOCK

Before building the mantle clock on page 6, you'll need to decide whether you want to use a mechanical movement and build the clock with glass side panels or a quartz movement with plywood side panels.

MECHANICAL MOVEMENT. The clock we used is a Hermle key-wound mechanical movement that features three different chime melodies: Westminster, Whittington, and St. Michael's, see left photo below. This movement strikes out the hours on eight chime rods and also features a silencer. Besides the clock movement, we also used a 7⅞"-dia. punched dial with raised numbers and spandrels (corners), and 3"-long serpentine hands.

For a limited time, *Woodsmith Project Supplies* is offering a mechanical movement and hardware kit for the mantle clock. Besides the movement, dial and hands, this kit also includes all the other hardware you need to build the clock — *except* the glass for the sides.

- Mantle Clock Mechanical Movement & Hardware Kit

7119-100 ..... $229.95

Note: No single source at right has all the hardware supplies we used to build this clock. This means you'll have to go to more than one source to find the identical hardware.

QUARTZ MOVEMENT. You can also choose to build this clock using a quartz movement instead of a mechanical one, see right photo.

Woodsmith Project Supplies is also offering a kit that includes the quartz movement as well as all the hardware. The movement includes a small, separately wired speaker, so the chimes (Westminster and "Bim-bam") are really authentic sounding.

- Mantle Clock Quartz Movement & Hardware Kit

7119-200 ..... $119.95

SHOP DRAWINGS. We are currently offering the shop drawings we used to build the mantle clock. These are "blueprint-style" scale drawings printed on 18" x 22" sheets.

- Mantle Clock Shop Drawings

7119-250 ..... $8.95

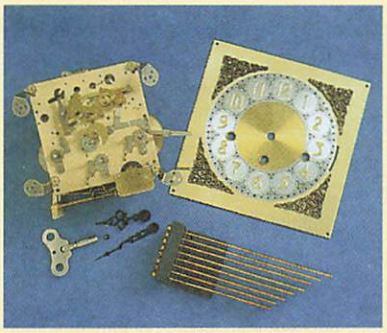

Mechanical Clock. *This kit includes a mechanical movement, prepunched dial, and chime rods. It also contains all the hardware (not shown) except glass.*

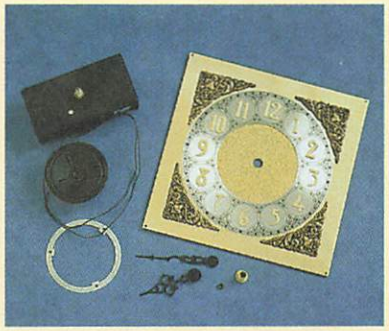

Quartz Clock. *The quartz movement in this kit has a speaker for authentic-sounding chimes. The kit also includes all the hardware needed except the glass.*

SPICE RACK

Before building the spice rack, it's a good idea to have your spice jars in hand. The only other items you'll need are three 1¾"-long (overall size) wooden pegs. For these items, see the mail order sources at right.

MAIL ORDER SOURCES

Similar project supplies and hardware may be ordered from the following companies:

Constantine's
800-223-8087
Polyurethane glue, Wood pegs

Klockit
800-556-2548
Mechanical & quartz movements, Mantle clock hardware

Lee Valley
800-871-8158
Wood pegs, Spice jars

S. LaRose, Inc.
800-537-4513
Mechanical & quartz movements

Woodcraft
800-225-1153
Polyurethane glue, Wood pegs

Woodsmith Store
800-835-5084
Polyurethane glue, Wood pegs

Rockler Woodworking (Woodworkers' Store)
800-279-4441
Mantle clock hardware, Polyurethane glue, Wood pegs

Woodworker's Supply
800-645-9292
Polyurethane glue, Wood pegs

WOODSMITH PROJECT SUPPLIES

To order hardware kits or shop drawings from *Woodsmith Project Supplies*, please use our Toll Free order line, see below. It's open Monday through Friday, from 8 AM to 5 PM Central Time. Before calling, please have your VISA, MasterCard, or Discover Card ready.

If you would like to mail in your order, call the number below for more information concerning shipping charges as well as any applicable sales tax.

1-800-444-7527

When ordering, please use Key W119

Note: Prices subject to change after December 1998.

WoodNet™ NOW ON THE WEB!

- Over 100 Woodworking Tips Online
- Project Plans You Can Download
- Forums for Woodworking, Tools & Classifieds
- Catalog of Project Kits, Tools & Jigs
- Power Tool Reviews
- Links to Other Woodworking Sites
- *Woodsmith/ShopNotes* Back Issue Index

Point your browser to:

http://www.woodsmith.com

Then select the "WoodNet" option from the menu.

A LAST LOOK

FINAL DETAILS

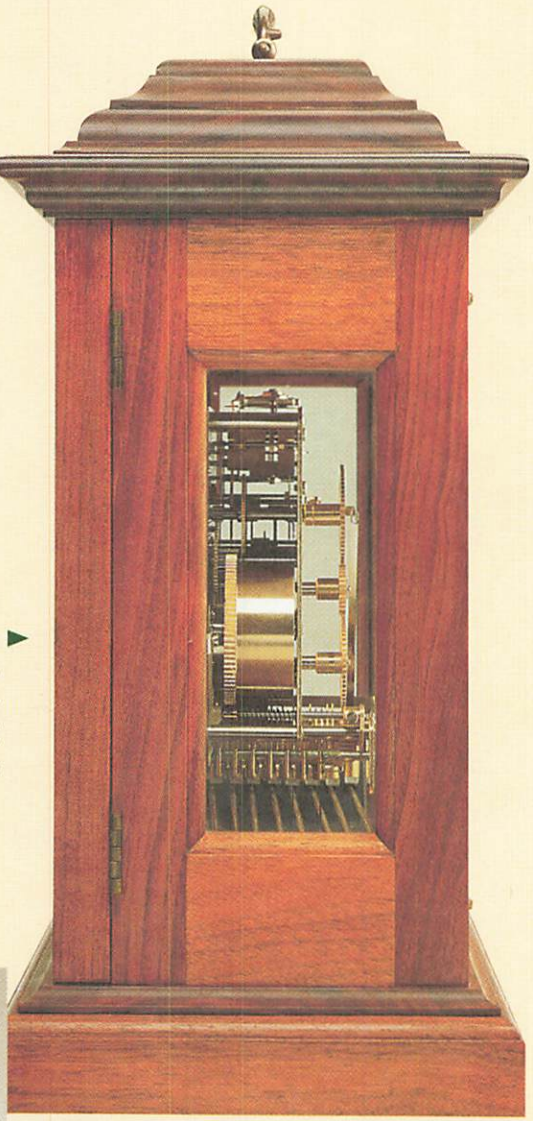

Mantle Clock. *The glass sides of this clock allow you to catch a fascinating glimpse into the workings of the mechanical movement inside. Instructions for the clock start on page 6.* ►

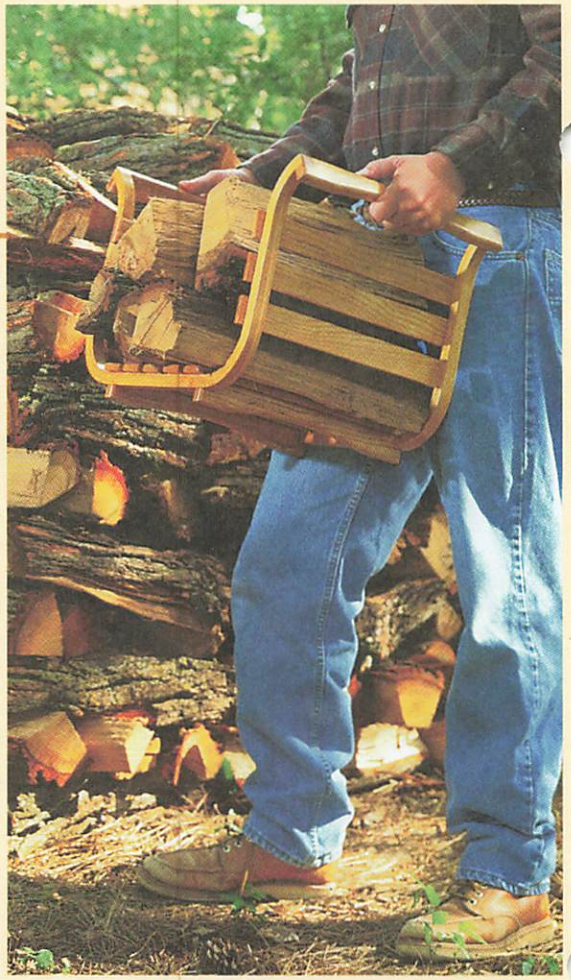

▲ ***Firewood Carrier.*** *Lightweight and strong, the free-flowing design of this carrier is created with bent lamination. Detailed plans begin on page 14.*

▲ ***Spice Rack.*** *This handy spice rack will give you a chance to try out an interesting joint — a lap dovetail. Plans start on page 28.*

▲ ***Bent Lamination.*** *To bend thin strips, all you need is a shop-made form, glue, and a few clamps. We'll walk you through this process in the article beginning on page 18.*